WMG 2-40

Water mixing units



	Unit of measurement	WMG 2-40
Phases	-	3
Minimum supply voltage	V	400
Maximum supply voltage	V	400
Power supply frequency	Hz	50
Weight	kg	31

Dimensions

B	H	H1	L
312	474	290	660

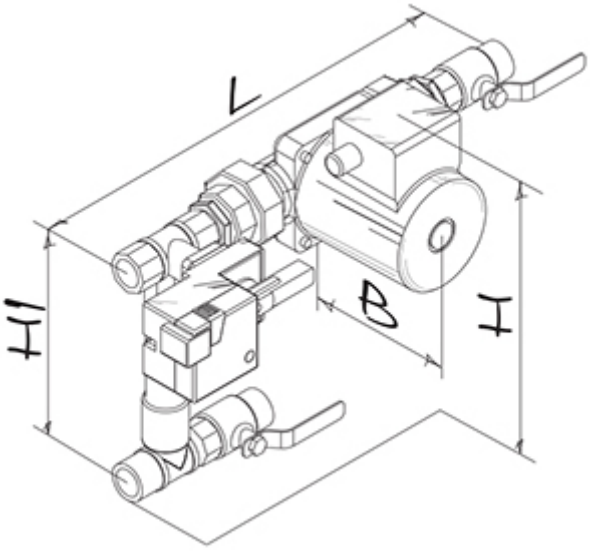
L
H1
B
H