WMG 1-10

Water mixing units



	Unit of measurement	WMG 1-10
Phases	-	1
Minimum supply voltage	V	230
Maximum supply voltage	V	230
Power supply frequency	Hz	50
Weight	kg	6.8

Dimensions

B	H	H1	L
175	320	210	490

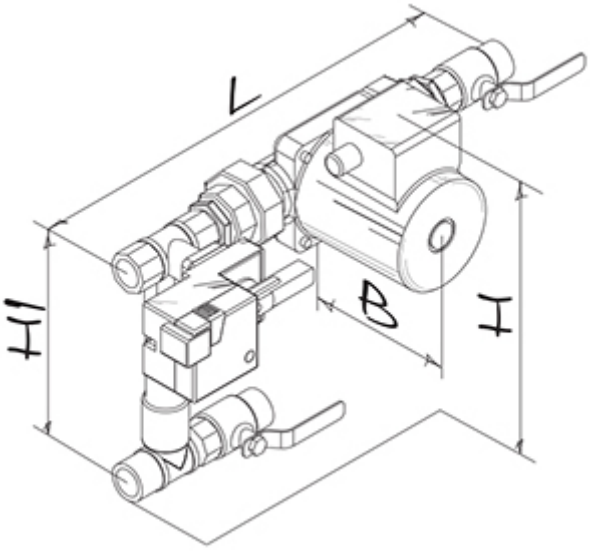
L
H1
B
H