WMG 1 1/4-16

Water mixing units



	Unit of measurement	WMG 1 1/4-16
Phases	-	1
Minimum supply voltage	V	230
Maximum supply voltage	V	230
Power supply frequency	Hz	50
Weight	kg	7.4

Dimensions

B	H	H1	L
175	355	240	500

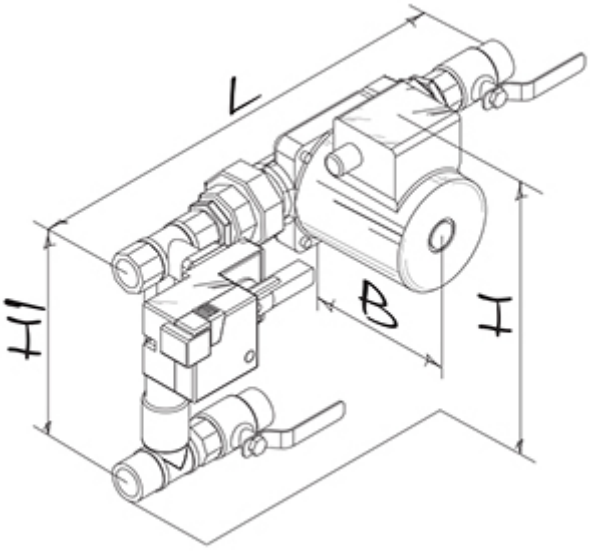
L
H1
B
H