WMG 1 1/2-25

Water mixing units



	Unit of measurement	WMG 1 1/2-25
Phases	-	1
Minimum supply voltage	V	230
Maximum supply voltage	V	230
Power supply frequency	Hz	50
Weight	kg	23

Dimensions

B	H	H1	L
266	420	255	610

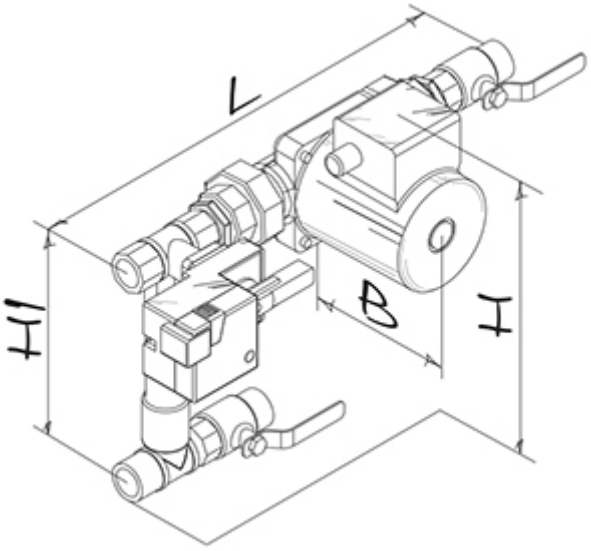
L
H1
B
H