# WMG 1 1/2-16

Water mixing units



| | Unit of measurement | WMG 1 1/2-16 |
|---|---|---|
| Phases | - | 1 |
| Minimum supply voltage | V | 230 |
| Maximum supply voltage | V | 230 |
| Power supply frequency | Hz | 50 |
| Weight | kg | 23 |

## Dimensions

| B | H | H1 | L |
|---|---|---|---|
| 266 | 420 | 255 | 610 |

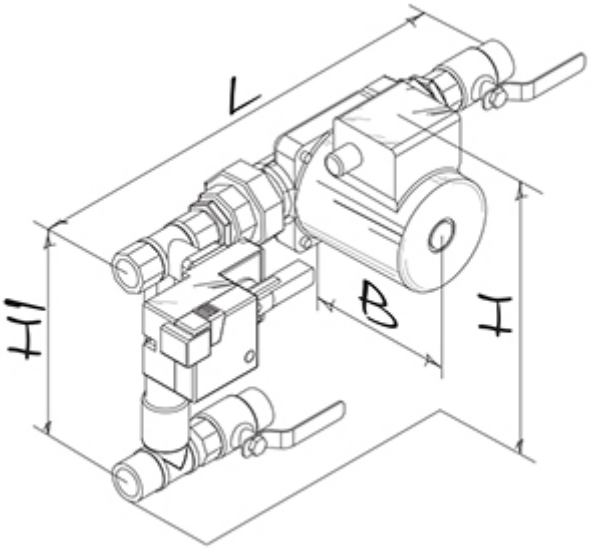
L
H1
B
H