

Wind-K 125 H

Window extract fans

- Sound pressure level LpA at 3 m: 35
- Casing material: Plastic
- Humidity sensor
- Timer: Turn off timer

	Unit of measurement	Wind-K 125 H
Connected air duct size	mm	125
Minimum supply voltage	V	220
Maximum supply voltage	V	240
Power supply frequency	Hz	50
Rated power	W	22
Unit current	A	0.1
Maximum airflow	m³/h	185
Rotation speed at 50hz	-	2400
Sound pressure level LpA at 3 m	dB(A)	35
Ambient air temperature max	°C	40
Ambient air temperature min	°C	1
Ingress protection rating	-	IP24
Impeller material	-	Plastic

Dimensions

a	b	g	h
186	173	183	160

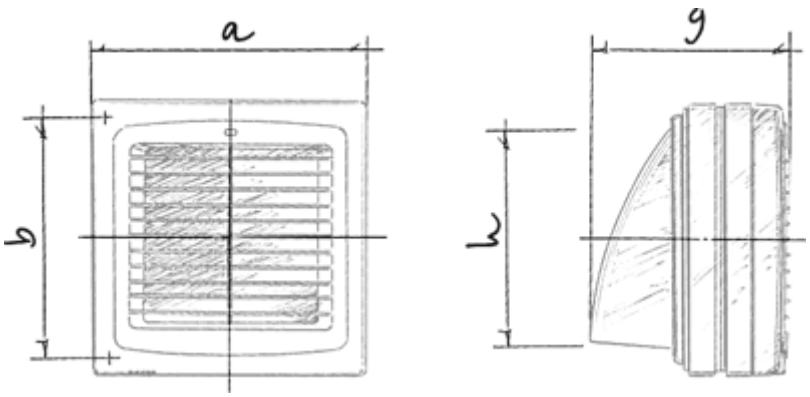
a
b
g
h

Ecodesign

Trademark	Blauberg					
Model	Wind-K 125 H					
Specific energy consumption (SEC) (kWh/(m²/a))	Cold		Average		Warm	
	-49.6	A+	-24.5	C	-10.1	E
Type of ventilation unit	Unidirectional					
Type of drive installed	Multi-speed					
Type of heat recovery system	None					
Maximum flow rate (m³/h)	185					
Electric power input (W)	22					
Reference flow rate (m³/s)	0.036					
Specific power input (SPI) (W/(m³/h))	0.076					
Control typology	Local demand control					
Maximum external leakage rates (%)	2.7					
Airflow sensitivity at +20 Pa and -20 Pa (%)	0.15					
The indoor/outdoor air tightness (m³/h)	1					
Declared typology	RVU UVU					
Sound power level (dB(A))	55					
The annual electricity consumption (AEC) (kWh/a)	Cold		Average		Warm	
	68		68		68	
The annual heating saved (AHS) (kWh/a)	Cold		Average		Warm	
	5131		2623		1186	