

VRVS 200

Backdraft air dampers for round ducts

- Casing material: Galvanized steel

	Unit of measurement	VRVS 200
Connected air duct size	mm	200
Weight	kg	1.57

Dimensions

ØD	B	L
199	238	220

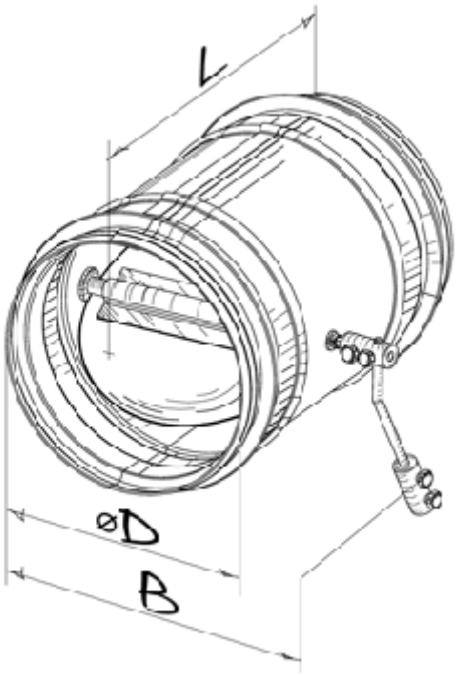
L
øD
B