

VRVS 150

Backdraft air dampers for round ducts

- Casing material: Galvanized steel

	Unit of measurement	VRVS 150
Connected air duct size	mm	150
Weight	kg	0.97

Dimensions

ØD	B	L
149	194	180

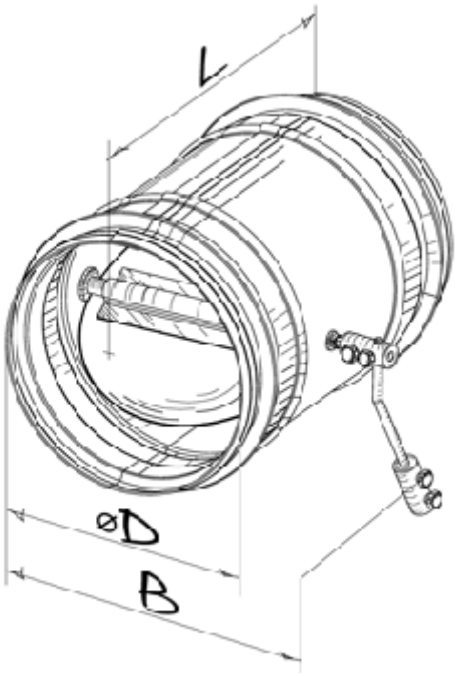
L
øD
B