

VRVS 100

Backdraft air dampers for round ducts

- Casing material: Galvanized steel

	Unit of measurement	VRVS 100
Connected air duct size	mm	100
Weight	kg	0.65

Dimensions

ØD	B	L
99	139	150

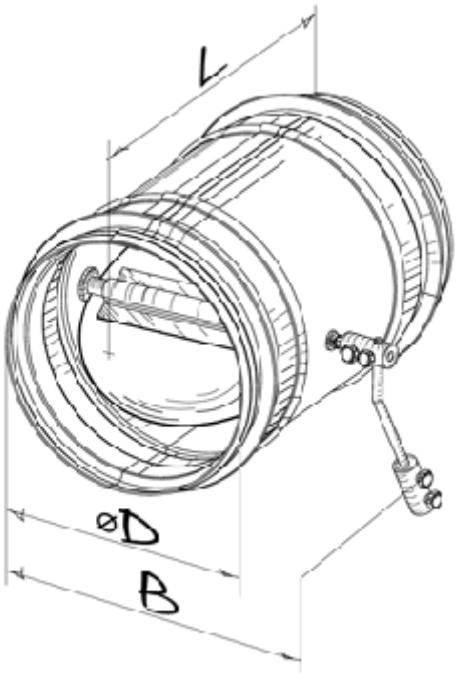
L
øD
B