

Valeo-E 75/100 K H

High-pressure centrifugal fans in a plastic wall-mounted casing with backward air discharge

- Sound pressure level LpA at 3 m: 38
- Control: Wired control panel
- Casing material: Plastic
- Backdraft protection: Backdraft damper
- Humidity sensor: Built-in

	Unit of measurement	Valeo-E 75/100 K H	
Speed	-	1	2
Connected air duct size	mm	80	
Phases	-	1	
Minimum supply voltage	V	220	
Maximum supply voltage	V	240	
Power supply frequency	Hz	50	
Rated power	W	24	29
Unit current	A	0.11	0.13
Maximum airflow	m³/h	75	100
Sound pressure level LpA at 3 m	dB(A)	29	38
Weight	kg	2.7	
Ambient air temperature min	°C	1	
Ambient air temperature max	°C	40	
Ingress protection rating	-	IP55	

Dimensions

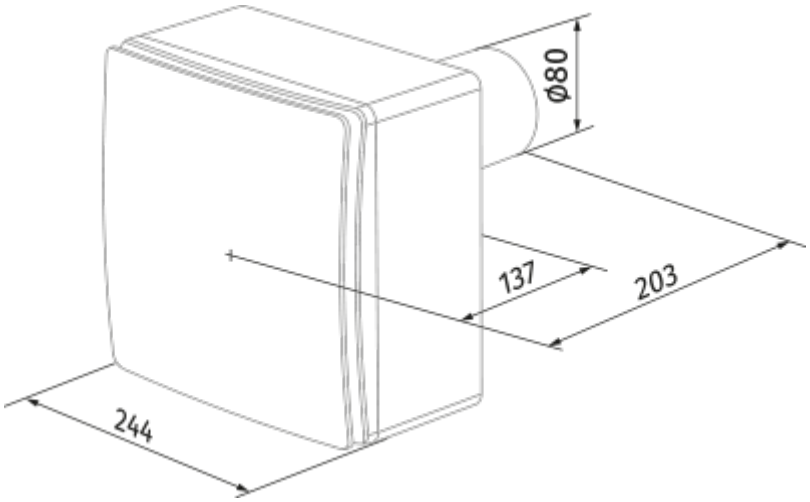

Accessories

Speed control switches

Name	Photo	Description
CDP-3/5		Multi-speed switch