

Valeo-E 35/60 TR

High-pressure centrifugal fans in a plastic wall-mounted casing with backward air discharge

- Sound pressure level LpA at 3 m: 36
- Control: Wired control panel
- Casing material: Plastic
- Backdraft protection: Backdraft damper
- Motion sensor
- Timer: Built-in

	Unit of measurement	Valeo-E 35/60 TR	
Speed	-	1	2
Connected air duct size	mm	80	
Phases	-	1	
Minimum supply voltage	V	220	
Maximum supply voltage	V	240	
Power supply frequency	Hz	50	
Rated power	W	15	25
Unit current	A	0.12	0.14
Maximum airflow	m³/h	35	63
Rotation speed at 50hz	-	890	1350
Sound pressure level LpA at 3 m	dB(A)	27	36
Weight	kg	2.7	
Ambient air temperature min	°C	1	
Ambient air temperature max	°C	40	
Ingress protection rating	-	IP55	

Dimensions

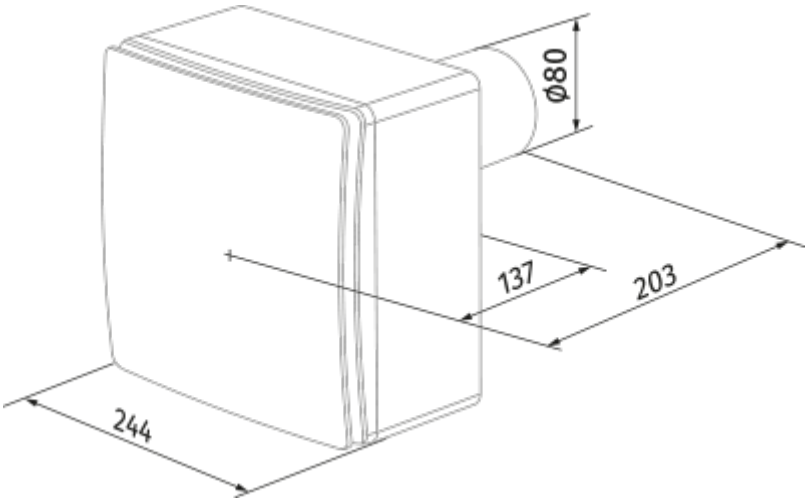
ø80
137
203
244

Ecodesign

Trademark	Blauberg					
Model	Valeo-E 35/60 TR					
Specific energy consumption (SEC) (kWh/(m²/a))	Cold		Average		Warm	
	-24	C	-6.1	F	4.1	G
Type of ventilation unit	Unidirectional					
Type of drive installed	2-speed					
Type of heat recovery system	None					
Maximum flow rate (m³/h)	63					
Electric power input (W)	25					
Reference flow rate (m³/s)	0.01					
Reference pressure difference (Pa)	50					
Specific power input (SPI) (W/(m³/h))	0.429					
Control typology	Clock control					
Maximum external leakage rates (%)	2.7					
Declared typology	RVU UVU					
Sound power level (dB(A))	47					
The annual electricity consumption (AEC) (kWh/a)	Cold		Average		Warm	
	505		505		505	
The annual heating saved (AHS) (kWh/a)	Cold		Average		Warm	
	3667		1874		848	

Accessories

Speed control switches

Name	Photo	Description
CDP-3/5		Multi-speed switch