

# Turbo-E 160 GTI1

Mixed-flow inline fans

- Sound pressure level LpA at 3 m: 44
- Control: Built-in speed controller
- Impeller type: Mixed-flow
- Casing material: Plastic
- Installation in any position
- Cable with mains plug
- Temperature sensor: Built-in
- Timer: Turn off timer

| | Unit of measurement | Turbo-E 160 GTI1 | |
|---|---|---|---|
| Speed | - | 1 | 2 |
| Connected air duct size | mm | 160 | |
| Phases | - | 1 | |
| Minimum supply voltage | V | 230 | |
| Maximum supply voltage | V | 230 | |
| Power supply frequency | Hz | 50/60 | |
| Rated power | W | 47 | 60 |
| Unit current | A | 0.21 | 0.27 |
| Maximum airflow | $m^3/h$ | 405 | 520 |
| Rotation speed at 50hz | - | 1680 | 2460 |
| Sound pressure level LpA at 3 m | dB(A) | 33 | 44 |
| Weight | kg | 3.22 | |
| Transported air temperature (max) | °C | 60 | |
| Transported air temperature (min) | °C | -25 | |
| Ingress protection rating | - | IPX4 | |
| Ingress protection rating of the drive | - | IPX4 | |
| Impeller material | - | Plastic | |

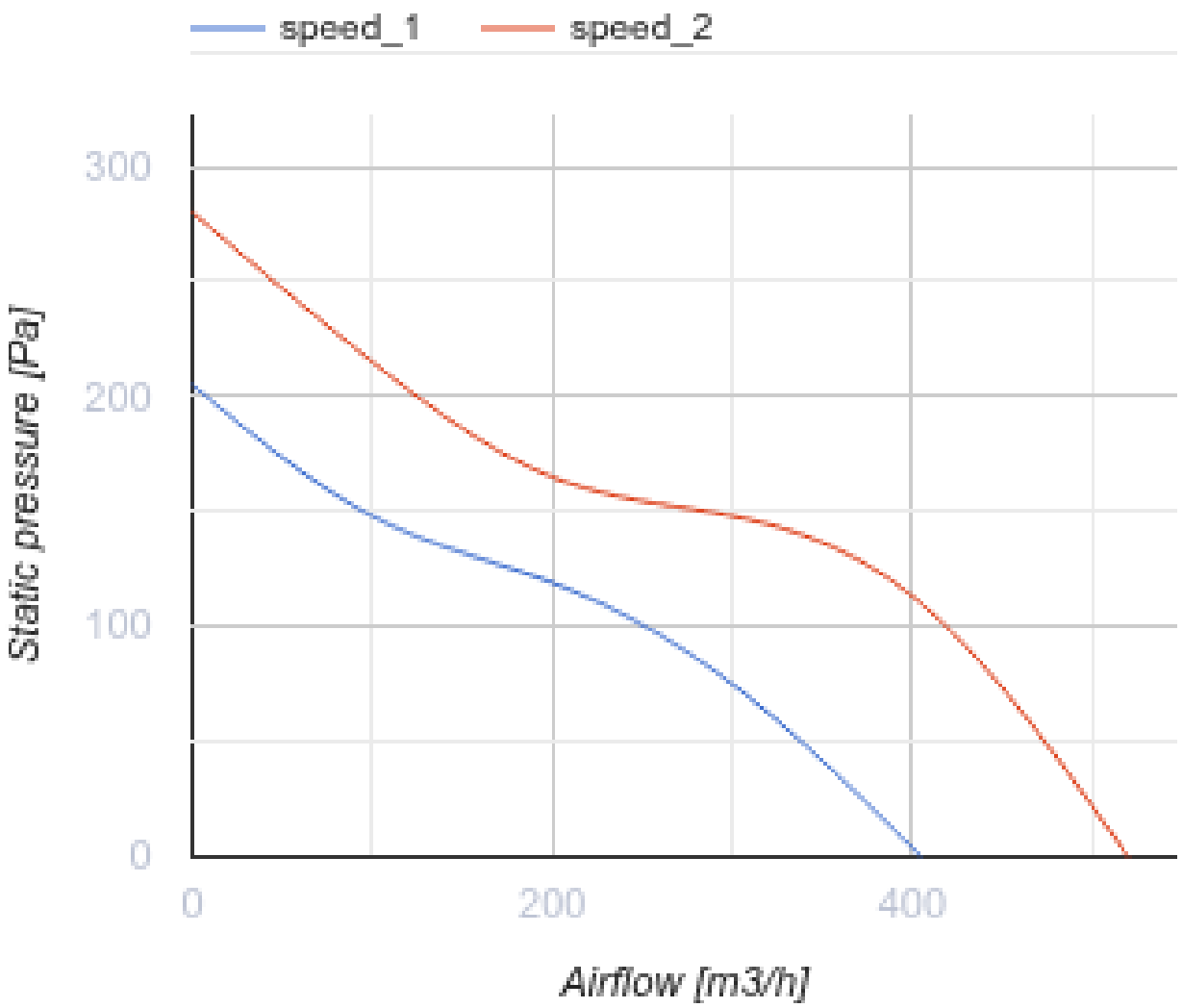
speed_1
speed_2
300
200
100
0
Static pressure [Pa]
0
200
400
Airflow [m3/h]

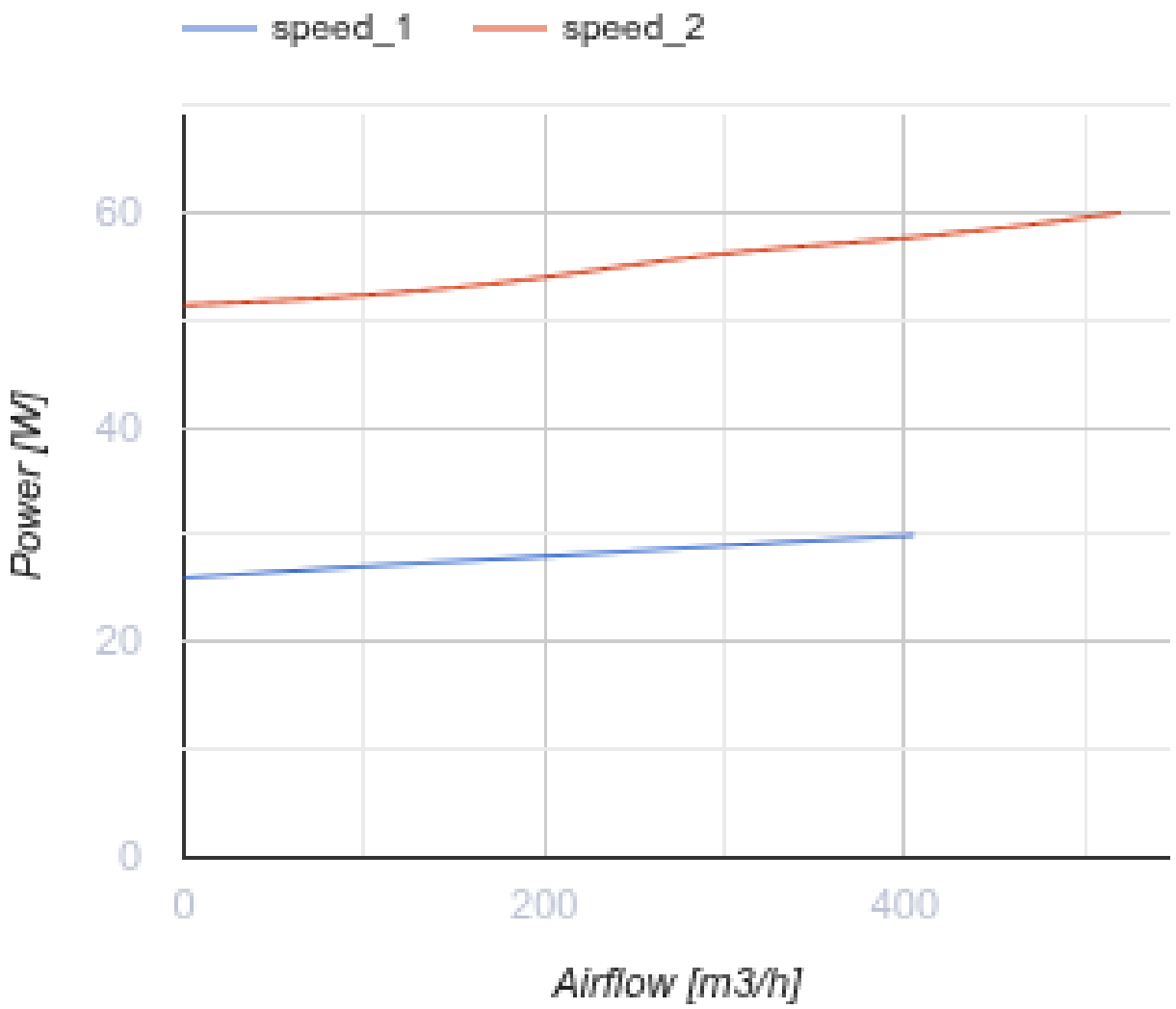


## Dimensions

| Ø D | B | H | L |
|---|---|---|---|
| 158 | 233 | 265 | 295 |

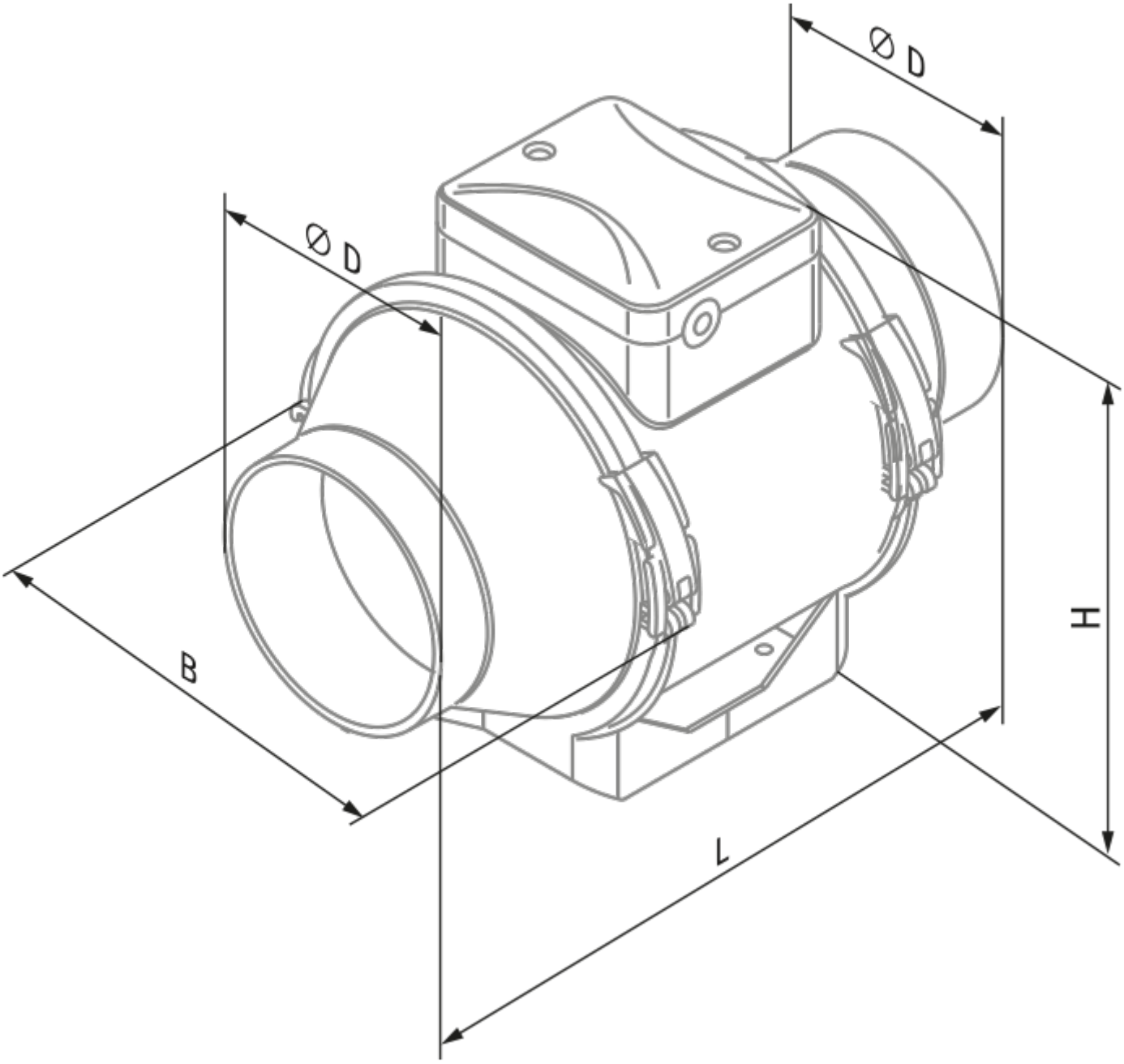
Ø D
Ø D
B
H
L

## Ecodesign

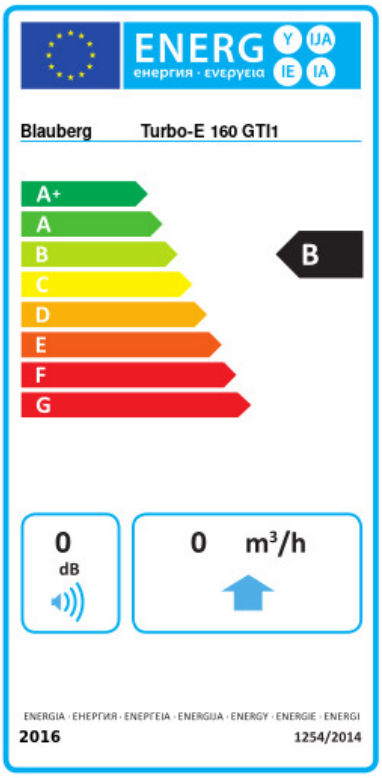


| Trademark | Blauberg | | | | | |
|---|---|---|---|---|---|---|
| Model | Turbo-E 160 GTI1 | | | | | |
| Specific energy consumption (SEC) (kWh/(m²/a)) | Cold | | Average | | Warm | |
| | -53.9 | A+ | -26.8 | B | -11.3 | E |
| Type of ventilation unit | Unidirectional | | | | | |
| Type of drive installed | Variable speed | | | | | |
| Type of heat recovery system | None | | | | | |
| Maximum flow rate (m³/h) | 400 | | | | | |
| Electric power input (W) | 60 | | | | | |
| Reference flow rate (m³/s) | 0.086 | | | | | |
| Reference pressure difference (Pa) | 50 | | | | | |
| Specific power input (SPI) (W/(m³/h)) | 0.113 | | | | | |
| Control typology | Local demand control | | | | | |
| Maximum external leakage rates (%) | 2.7 | | | | | |
| Declared typology | RVU UVU | | | | | |
| Sound power level (dB(A)) | 64 | | | | | |
| The annual electricity consumption (AEC) (kWh/a) | Cold | | Average | | Warm | |
| | 60 | | 60 | | 60 | |
| The annual heating saved (AHS) (kWh/a) | Cold | | Average | | Warm | |
| | 5536 | | 2830 | | 1280 | |