

Turbo-E 125 max

Mixed-flow inline fans

- Sound pressure level LpA at 3 m: 42
- Impeller type: Mixed-flow
- Casing material: Plastic
- Installation in any position

	Unit of measurement	Turbo-E 125 max	
Speed	-	1	2
Connected air duct size	mm	125	
Phases	-	1	
Minimum supply voltage	V	230	
Maximum supply voltage	V	230	
Power supply frequency	Hz	50/60	
Rated power	W	47	60
Unit current	A	0.21	0.27
Maximum airflow	m³/h	295	440
Rotation speed at 50hz	-	1850	2510
Sound pressure level LpA at 3 m	dB(A)	31	42
Weight	kg	3.14	
Transported air temperature (max)	°C	60	
Transported air temperature (min)	°C	-25	
Ingress protection rating	-	IPX4	
Ingress protection rating of the drive	-	IPX4	
Impeller material	-	Plastic	

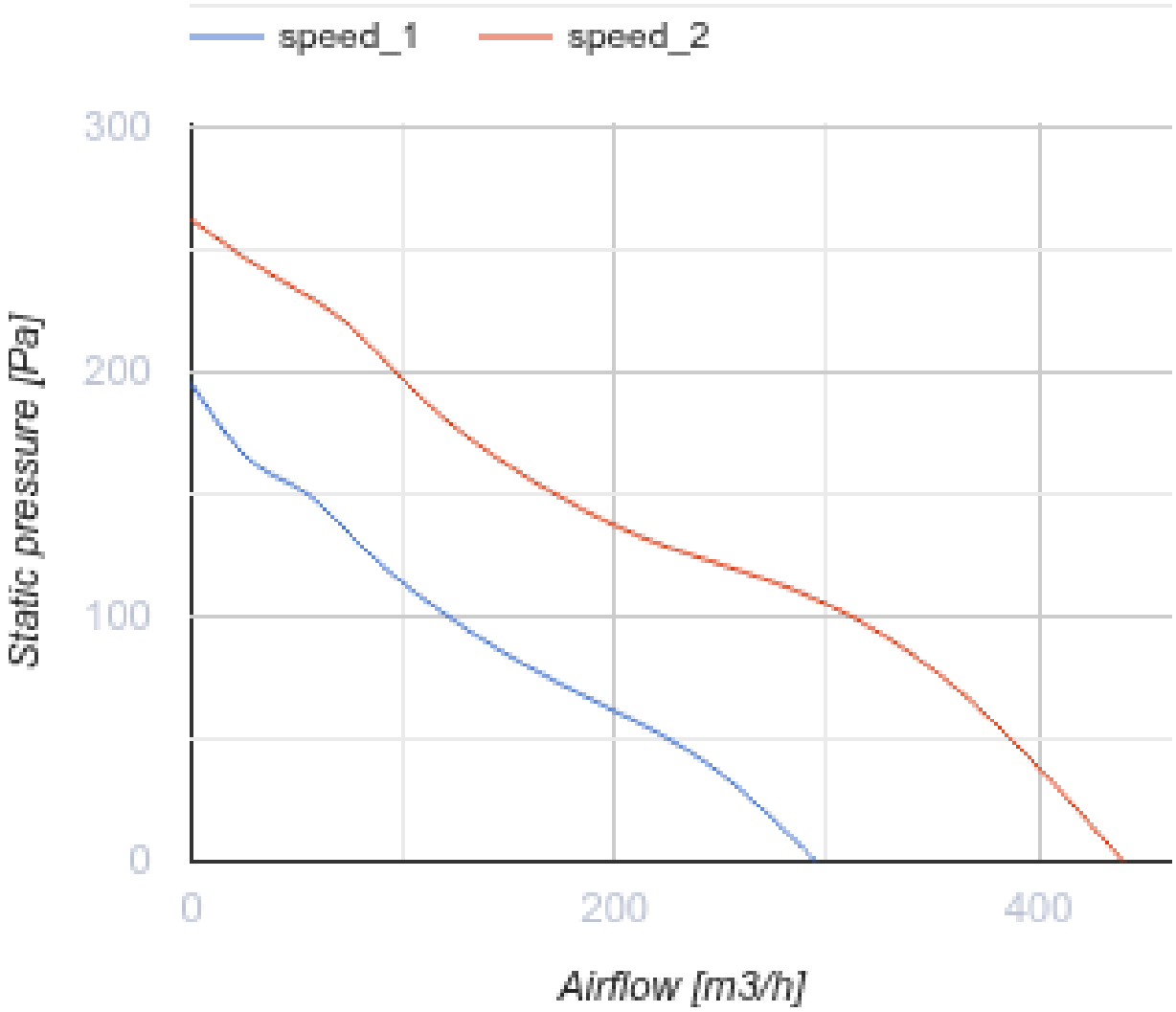
speed_1
speed_2
300
200
100
0
Static pressure [Pa]
0
200
400
Airflow [m3/h]

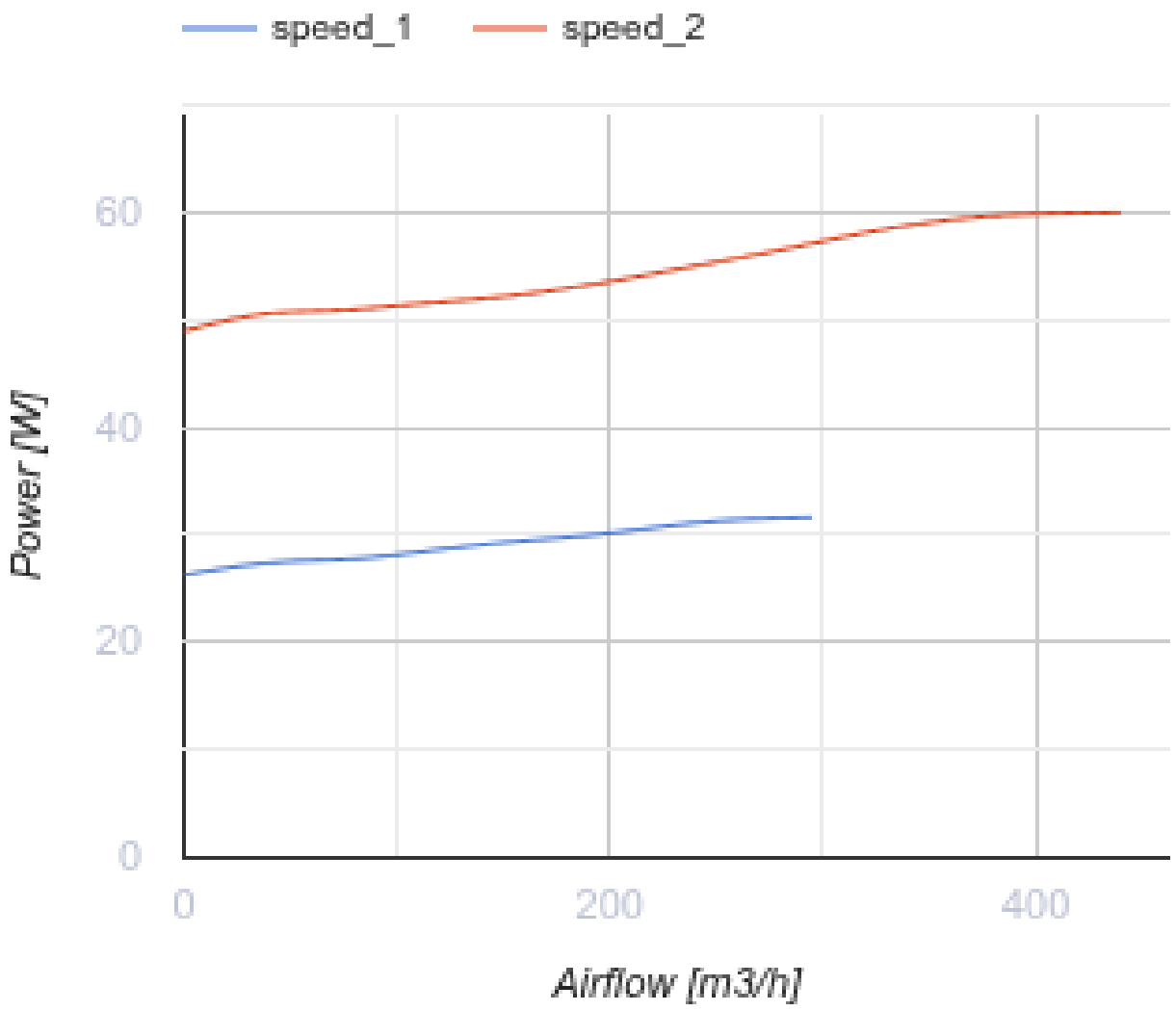

Dimensions

Ø D	B	H	L
123	223	265	295

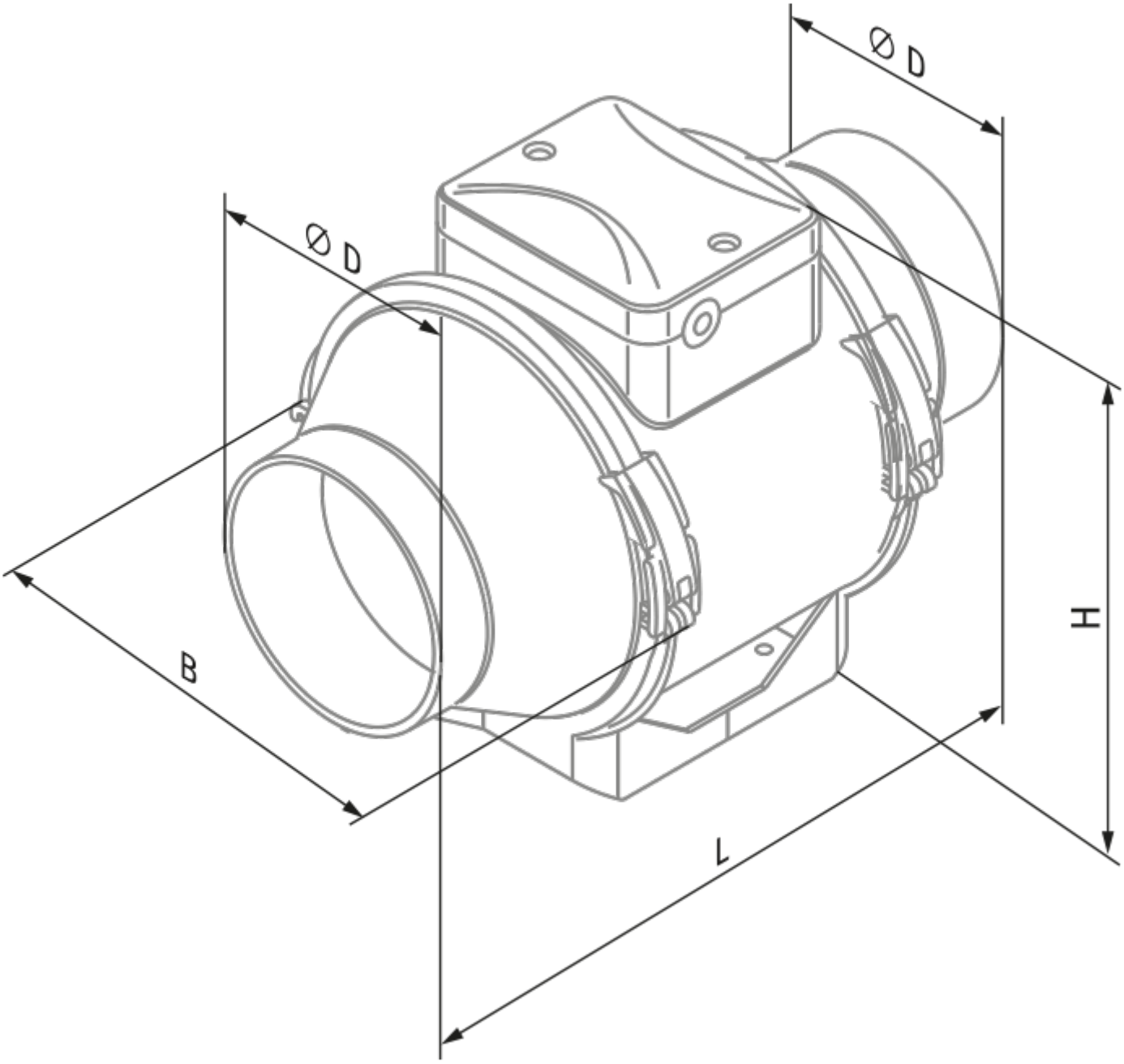
Ø D
Ø D
B
H
L

Ecodesign

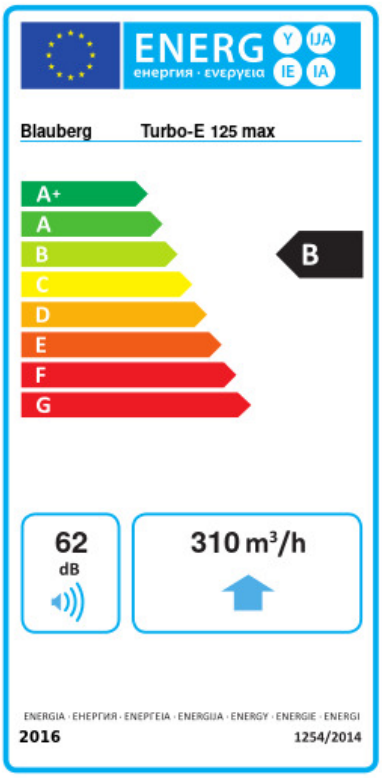

Trademark	Blauberg					
Model	Turbo-E 125 max					
Specific energy consumption (SEC) (kWh/(m²/a))	Cold		Average		Warm	
	-53.6	A+	-26.5	B	-11	E
Type of ventilation unit	Unidirectional					
Type of drive installed	Variable speed					
Type of heat recovery system	None					
Maximum flow rate (m³/h)	310					
Electric power input (W)	56					
Reference flow rate (m³/s)	0.071					
Reference pressure difference (Pa)	50					
Specific power input (SPI) (W/(m³/h))	0.134					
Control typology	Local demand control					
Maximum external leakage rates (%)	2.7					
Declared typology	RVU UVU					
Sound power level (dB(A))	62					
The annual electricity consumption (AEC) (kWh/a)	Cold		Average		Warm	
	71		71		71	
The annual heating saved (AHS) (kWh/a)	Cold		Average		Warm	
	5536		2830		1280	