

# Turbo-E 125 max G1

Mixed-flow inline fans

- Sound pressure level LpA at 3 m: 42
- Control: Built-in speed controller
- Impeller type: Mixed-flow
- Casing material: Plastic
- Installation in any position
- Cable with mains plug
- Temperature sensor: Built-in
- Timer: Turn off timer

| | Unit of measurement | Turbo-E 125 max G1 | |
|---|---|---|---|
| Speed | - | 1 | 2 |
| Connected air duct size | mm | 125 | |
| Phases | - | 1 | |
| Minimum supply voltage | V | 230 | |
| Maximum supply voltage | V | 230 | |
| Power supply frequency | Hz | 50/60 | |
| Rated power | W | 47 | 60 |
| Unit current | A | 0.21 | 0.27 |
| Maximum airflow | m³/h | 295 | 440 |
| Rotation speed at 50hz | - | 1850 | 2510 |
| Sound pressure level LpA at 3 m | dB(A) | 31 | 42 |
| Weight | kg | 3.14 | |
| Transported air temperature (max) | °C | 60 | |
| Transported air temperature (min) | °C | -25 | |
| Ingress protection rating | - | IPX4 | |
| Ingress protection rating of the drive | - | IPX4 | |
| Impeller material | - | Plastic | |

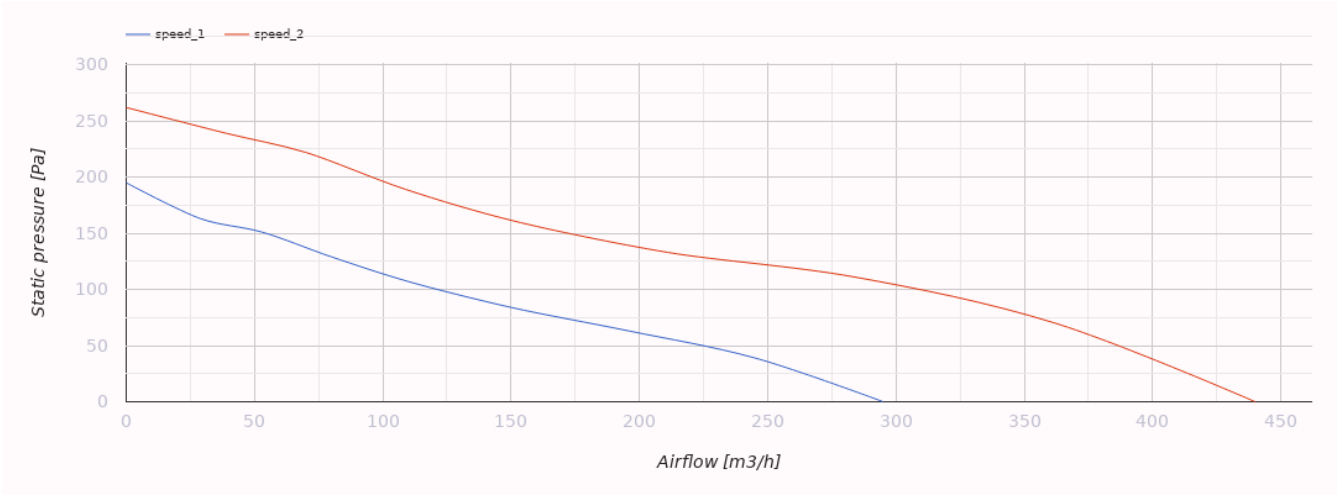


## Dimensions

| ∅ D | B | H | L |
|---|---|---|---|
| 123 | 223 | 265 | 295 |

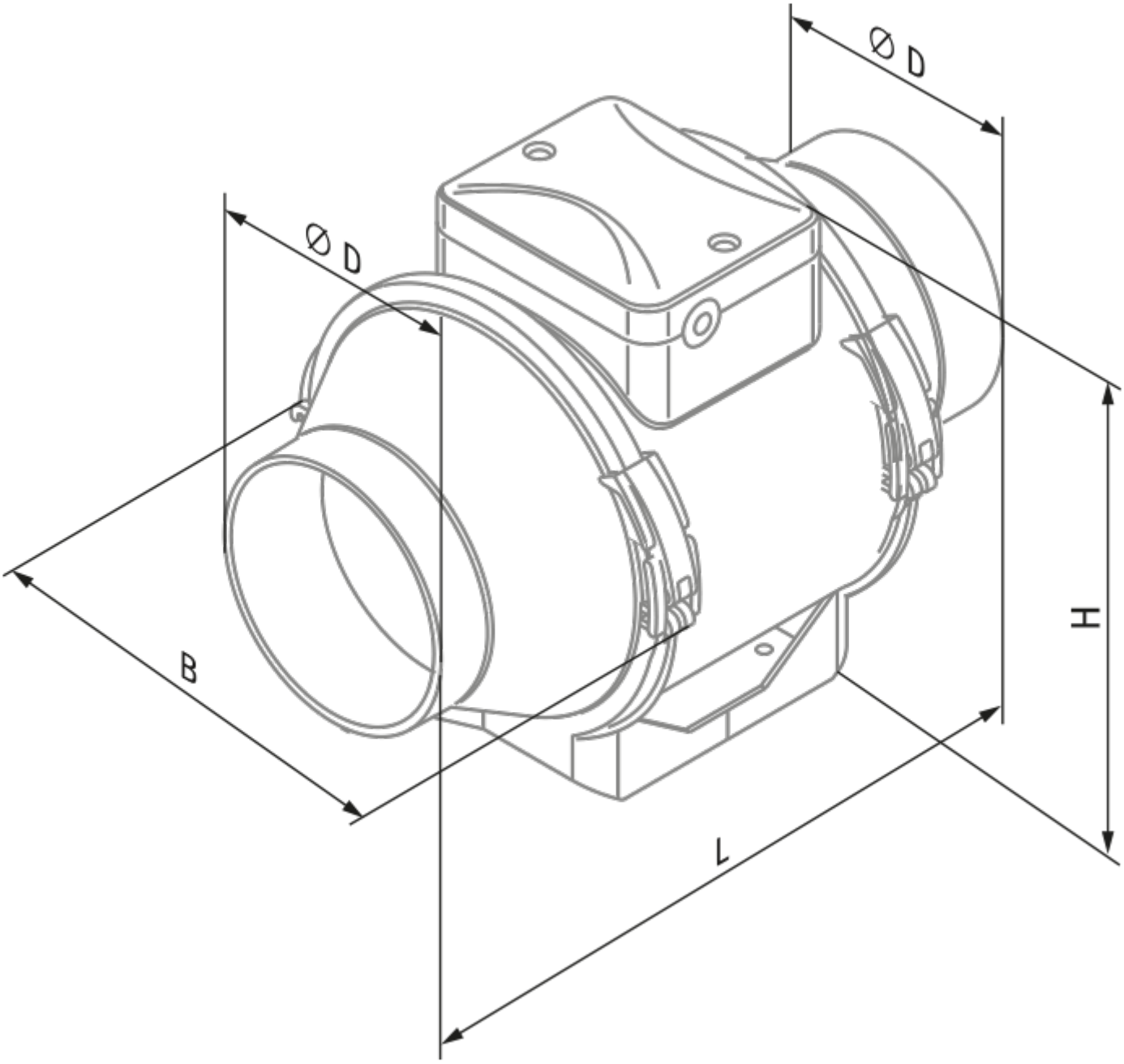
Ø D
Ø D
B
H
L

## Ecodesign

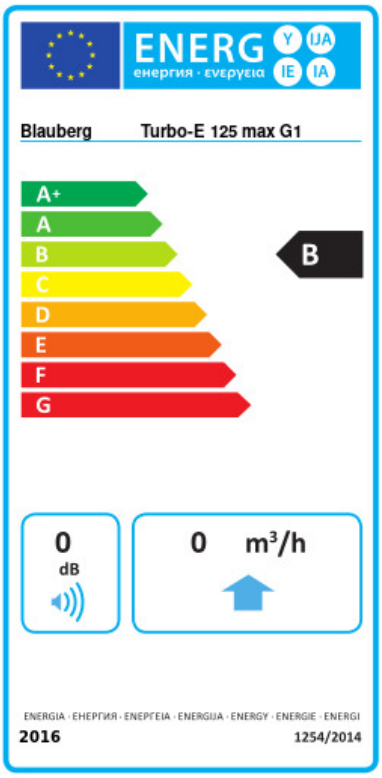


| Trademark | Blauberg | | | | | |
|---|---|---|---|---|---|---|
| Model | Turbo-E 125 max G1 | | | | | |
| Specific energy consumption (SEC) (kWh/(m²/a)) | Cold | | Average | | Warm | |
| | 0 | A+ | 0 | B | 0 | E |
| Type of ventilation unit | Unidirectional | | | | | |
| Type of drive installed | Variable speed | | | | | |
| Type of heat recovery system | None | | | | | |
| Maximum flow rate (m³/h) | 0 | | | | | |
| Electric power input (W) | 0 | | | | | |
| Reference flow rate (m³/s) | 0 | | | | | |
| Reference pressure difference (Pa) | 0 | | | | | |
| Specific power input (SPI) (W/(m³/h)) | 0 | | | | | |
| Control typology | Local demand control | | | | | |
| Maximum external leakage rates (%) | 0 | | | | | |
| Declared typology | RVU UVU | | | | | |
| Sound power level (dB(A)) | 0 | | | | | |
| The annual electricity consumption (AEC) (kWh/a) | Cold | | Average | | Warm | |
| | 0 | | 0 | | 0 | |
| The annual heating saved (AHS) (kWh/a) | Cold | | Average | | Warm | |
| | 0 | | 0 | | 0 | |