

Turbo 160 GTI1

Mixed-flow inline fans

- Sound pressure level LpA at 3 m: 44
- Control: Built-in speed controller
- Impeller type: Mixed-flow
- Casing material: Polypropylene
- Installation in any position
- Cable with mains plug
- Temperature sensor: Built-in
- Timer: Turn off timer

	Unit of measurement	Turbo 160 GTI1	
Speed	-	1	2
Connected air duct size	mm	160	
Phases	-	1	
Minimum supply voltage	V	230	
Maximum supply voltage	V	230	
Power supply frequency	Hz	50/60	
Rated power	W	42	50
Unit current	A	0.19	0.22
Maximum airflow	m³/h	415	565
Sound pressure level LpA at 3 m	dB(A)	32	44
Weight	kg	3.25	
Transported air temperature (max)	°C	60	
Ingress protection rating	-	IPX4	
Ingress protection rating of the drive	-	IPX4	
Impeller material	-	Plastic	

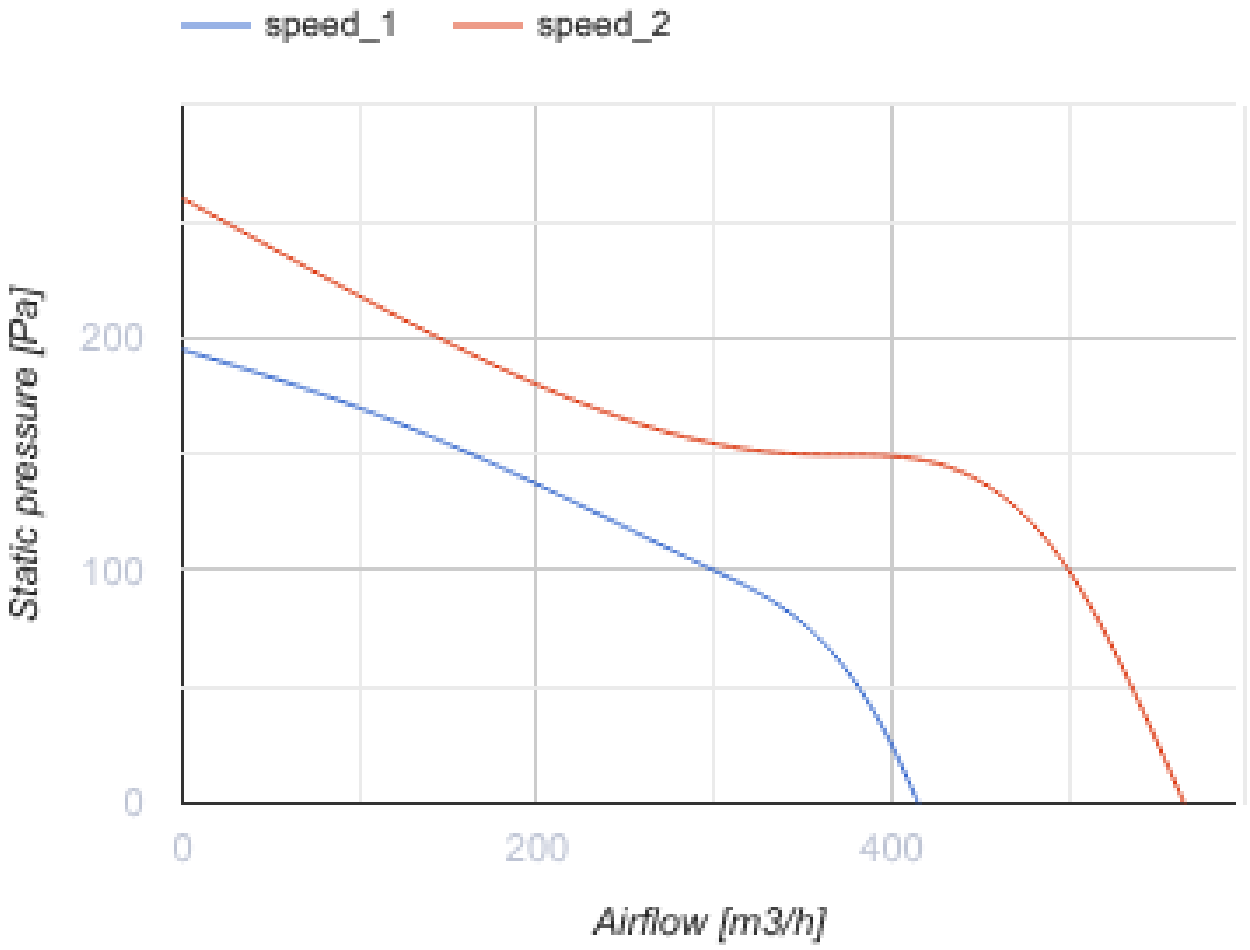
speed_1
speed_2
Static pressure [Pa]
200
100
0
0
200
400
Airflow [m3/h]

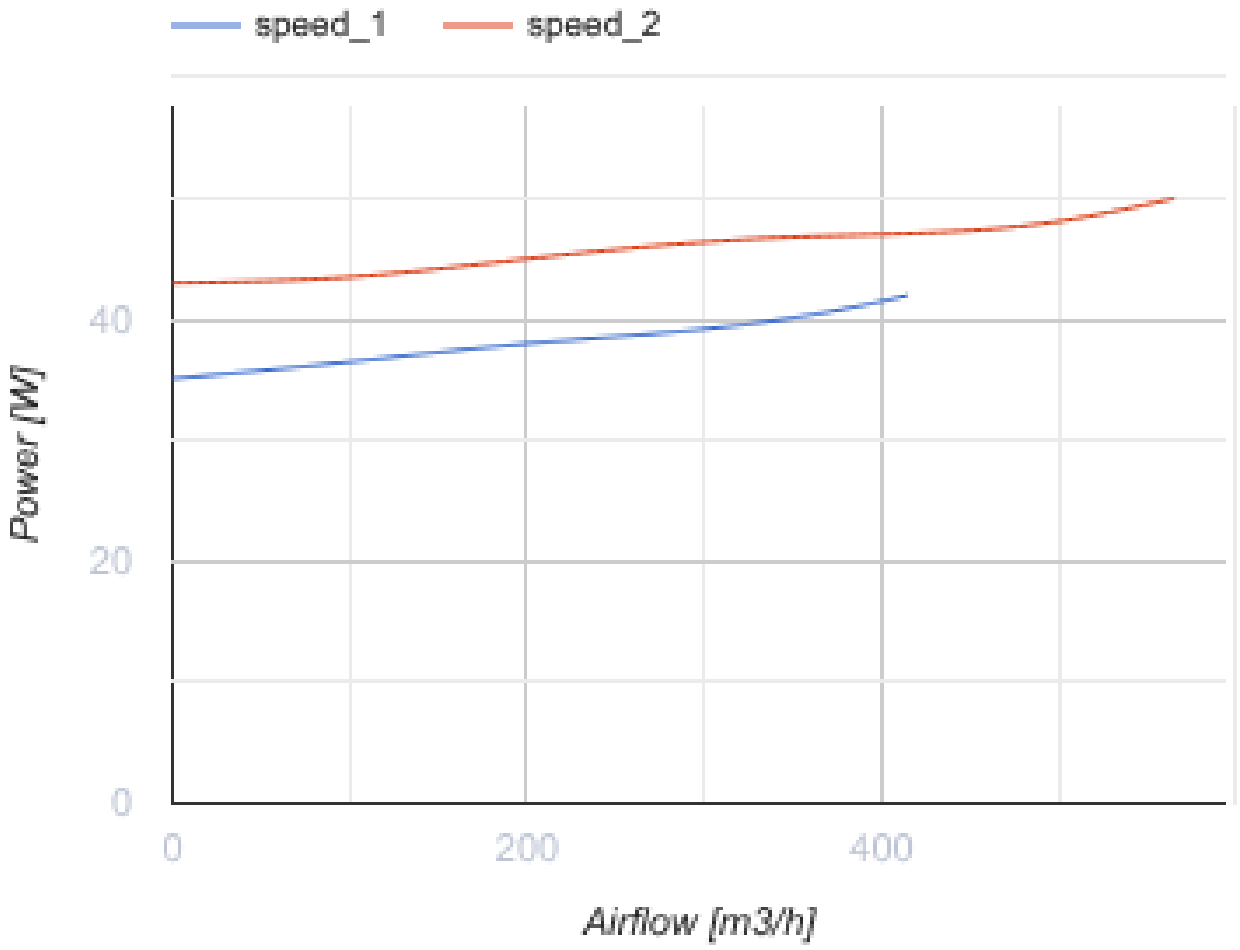

Dimensions

ØD	ØD1	B	H	L
158	187	220	251	289

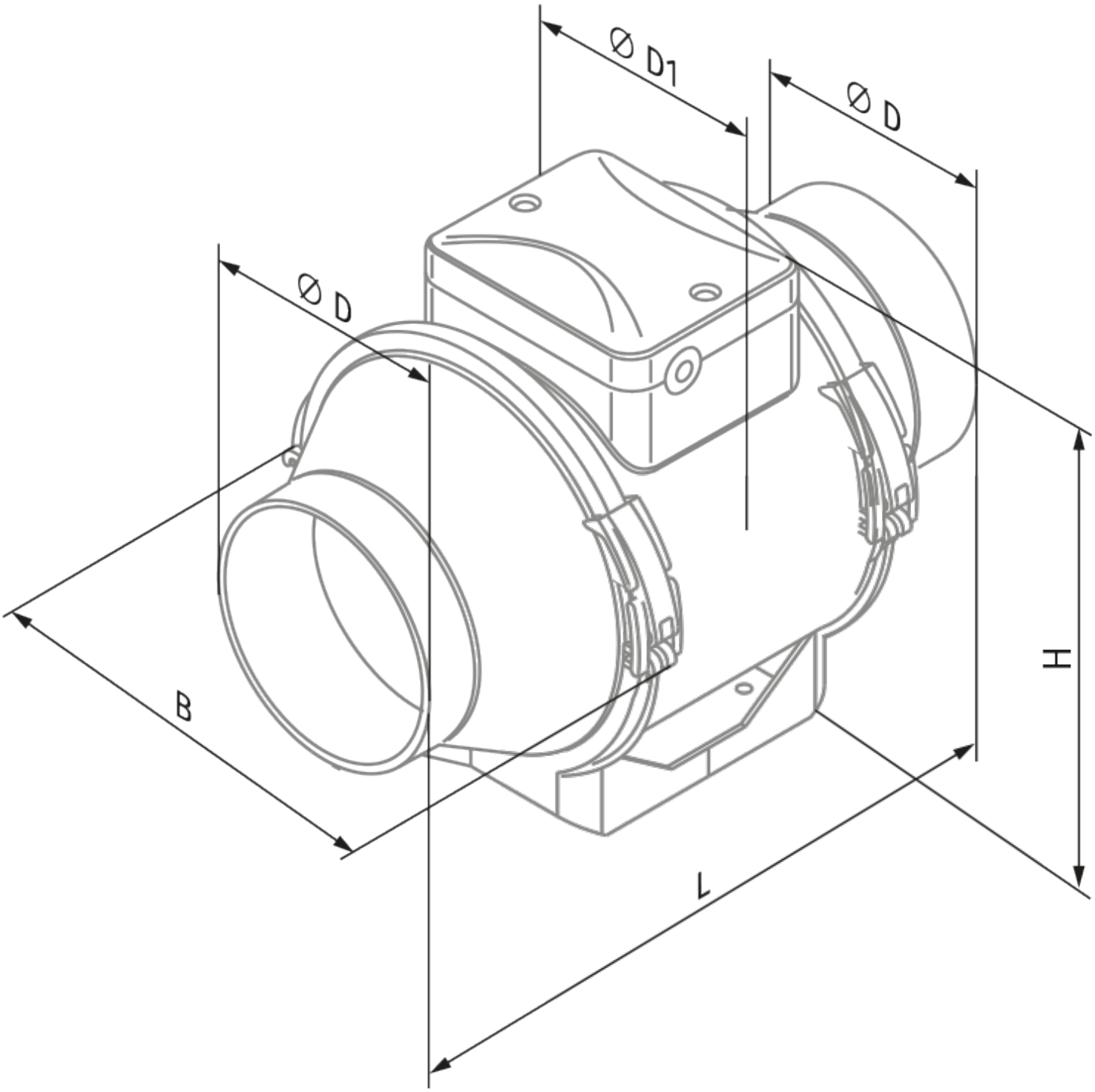
Ø D1
Ø D
Ø D
B
H
L

Ecodesign

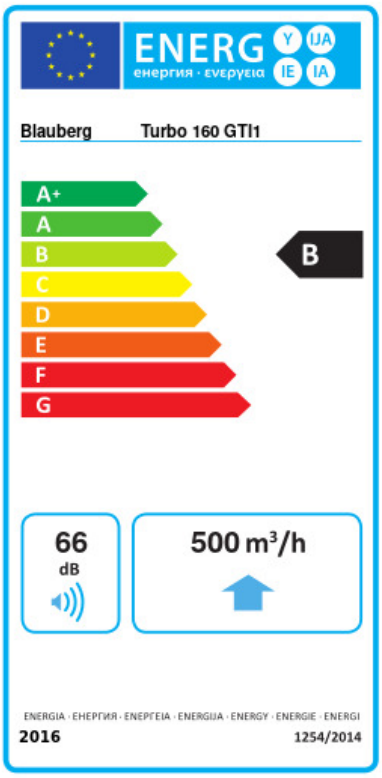

Trademark	Blauberg					
Model	Turbo 160 GTI1					
Specific energy consumption (SEC) (kWh/(m²/a))	Cold		Average		Warm	
	-53.8	A+	-26.7	B	-11.2	E
Type of ventilation unit	Unidirectional					
Type of drive installed	Variable speed					
Type of heat recovery system	None					
Maximum flow rate (m³/h)	500					
Electric power input (W)	50					
Reference flow rate (m³/s)	0.097					
Reference pressure difference (Pa)	50					
Specific power input (SPI) (W/(m³/h))	0.12					
Control typology	Local demand control					
Maximum external leakage rates (%)	2.7					
Declared typology	RVU UVU					
Sound power level (dB(A))	66					
The annual electricity consumption (AEC) (kWh/a)	Cold		Average		Warm	
	64		64		64	
The annual heating saved (AHS) (kWh/a)	Cold		Average		Warm	
	5536		2830		1280	

Accessories

For round ducts

Name	Photo	Description
SD 160/600		Silencers for round ducts
SD 160/900		Silencers for round ducts
SD 160/1200		Silencers for round ducts

For round ducts

Name	Photo	Description
KFBK 160		Filter boxes for round ducts
KFBT 160 G4	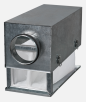	Filter boxes with pocket filters for round ducts
KFBT 160 F5		Filter boxes with pocket filters for round ducts
KFBT 160 F7		Filter boxes with pocket filters for round ducts

For round ducts

Name	Photo	Description
VRV 160		Backdraft dampers with spring for round ducts

For round ducts

Name	Photo	Description
VKA 160		Air dampers for round ducts

Water heaters

Name	Photo	Description
WKH 160-2		Duct water heaters for round ducts
WKH 160-4		Duct water heaters for round ducts

Electrical heaters

Name	Photo	Description
EKH 160-1.2		Duct electrical heaters for round ducts

EKH 160-1.7		Duct electrical heaters for round ducts
EKH 160-2.0		Duct electrical heaters for round ducts
EKH 160-2.4		Duct electrical heaters for round ducts
EKH 160-3.4		Duct electrical heaters for round ducts

Thyristor speed controllers

Name	Photo	Description

Speed control switches

Name	Photo	Description
CDP-2/5		Multi-speed switch
CDP-2/10		Multi-speed switch

Humidity sensors

Name	Photo	Description
HSE / HSI 1.5		Sensors
TE / TI 1.5		Timers
LSE / LSI 1.5		Sensors
IRSE / IRSI 1.5		Sensors

Fittings

Name	Photo	Description

K 160		Clamp for round flexible ducts