

Tubo-MZ 315

Inline axial fans

- Sound pressure level LpA at 3 m: 42
- Impeller type: Axial
- Casing material: Galvanized steel
- Installation in any position

	Unit of measurement	Tubo-MZ 315	
Speed	-	1	2
Phases	-	1	
Minimum supply voltage	V	220	
Maximum supply voltage	V	240	
Power supply frequency	Hz	50	60
Rated power	W	110	
Unit current	A	0.75	
Maximum airflow	m^3/h	1700	
Rotation speed at 50hz	-	1300	
Sound pressure level LpA at 3 m	dB(A)	42	
Weight	kg	4.84	
Transported air temperature (max)	°C	40	
Transported air temperature (min)	°C	-30	
Ingress protection rating	-	IPX4	
Ingress protection rating of the drive	-	IP44	
Impeller material	-	Aluminium	

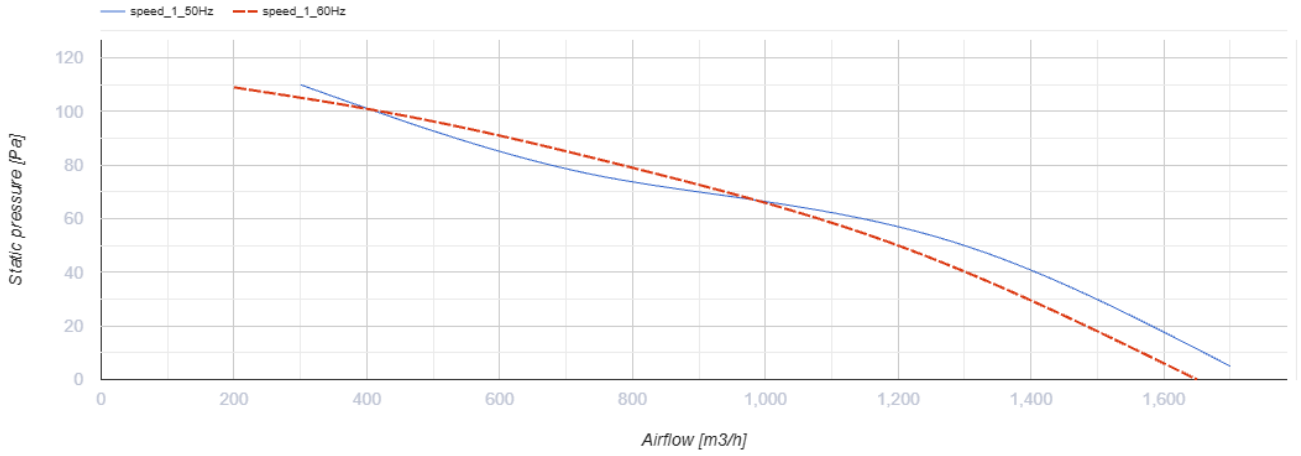

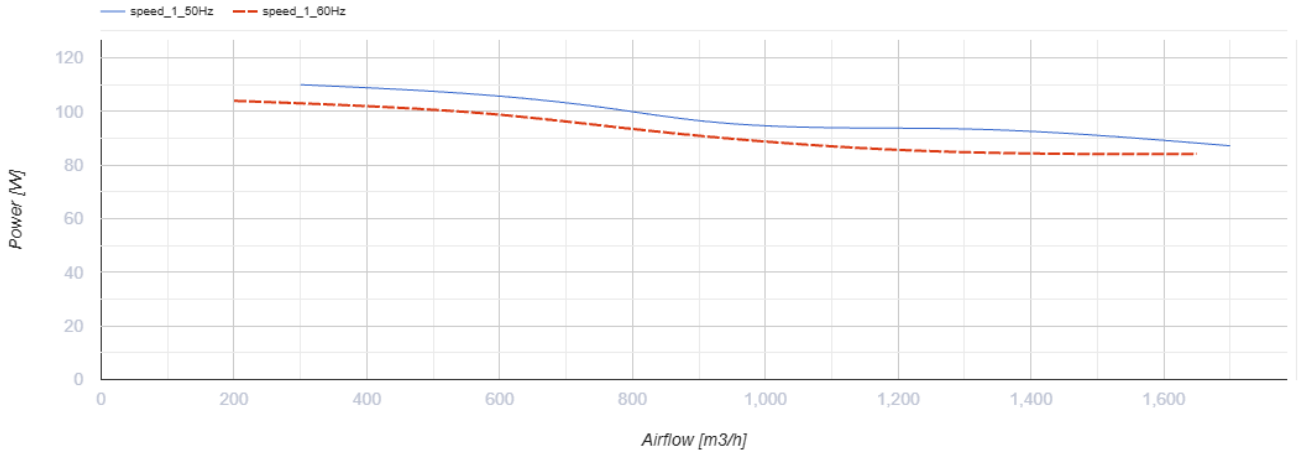

Dimensions

ØD	B	L	L1	L2
315	337	278	55	40

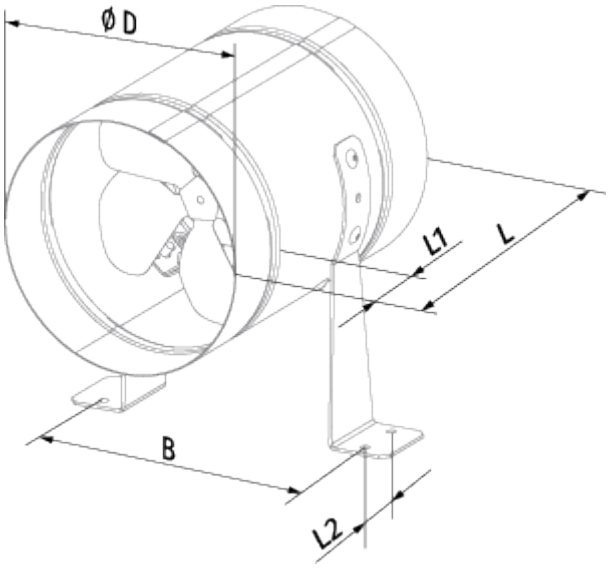
Ø D
L1
L
B
L2

Ecodesign

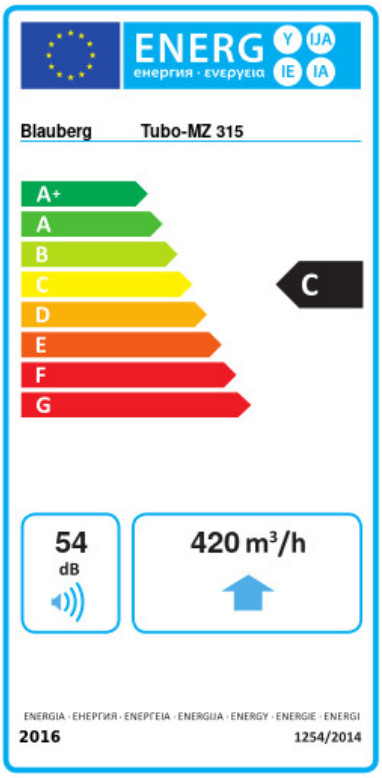

Trademark	Blauberg					
Model	Tubo-MZ 315					
Specific energy consumption (SEC) (kWh/(m²/a))	Cold		Average		Warm	
	-52.6	A+	-25.6	C	-10.1	E
Type of ventilation unit	Unidirectional					
Type of drive installed	Variable speed					
Type of heat recovery system	None					
Maximum flow rate (m³/h)	420					
Electric power input (W)	110					
Reference flow rate (m³/s)	0.082					
Reference pressure difference (Pa)	50					
Specific power input (SPI) (W/(m³/h))	0.206					
Control typology	Local demand control					
Maximum external leakage rates (%)	2.7					
Declared typology	RVU UVU					
Sound power level (dB(A))	54					
The annual electricity consumption (AEC) (kWh/a)	Cold		Average		Warm	
	109		109		109	
The annual heating saved (AHS) (kWh/a)	Cold		Average		Warm	
	5536		2830		1280	

Accessories

Transformer speed controllers

Name	Photo	Description
CDR5E E3.5 TP		Single phase speed controller
CDR5E E5.0 TP		Single phase speed controller
CDR5E E7.5 TP		Single phase speed controller

CDR5E E1.5 TP		Single phase speed controller