

# Tubo-MZ 250

Inline axial fans

- Sound pressure level LpA at 3 m: 37
- Impeller type: Axial
- Casing material: Galvanized steel
- Installation in any position

| | Unit of measurement | Tubo-MZ 250 | |
|---|---|---|---|
| Speed | - | 1 | 2 |
| Phases | - | 1 | |
| Minimum supply voltage | V | 220 | |
| Maximum supply voltage | V | 240 | |
| Power supply frequency | Hz | 50 | 60 |
| Rated power | W | 68 | |
| Unit current | A | 0.48 | |
| Maximum airflow | $m^3/h$ | 1070 | |
| Rotation speed at 50hz | - | 1300 | |
| Sound pressure level LpA at 3 m | dB(A) | 37 | |
| Weight | kg | 3.97 | |
| Transported air temperature (max) | °C | 40 | |
| Transported air temperature (min) | °C | -30 | |
| Ingress protection rating | - | IPX4 | |
| Ingress protection rating of the drive | - | IP44 | |
| Impeller material | - | Aluminium | |

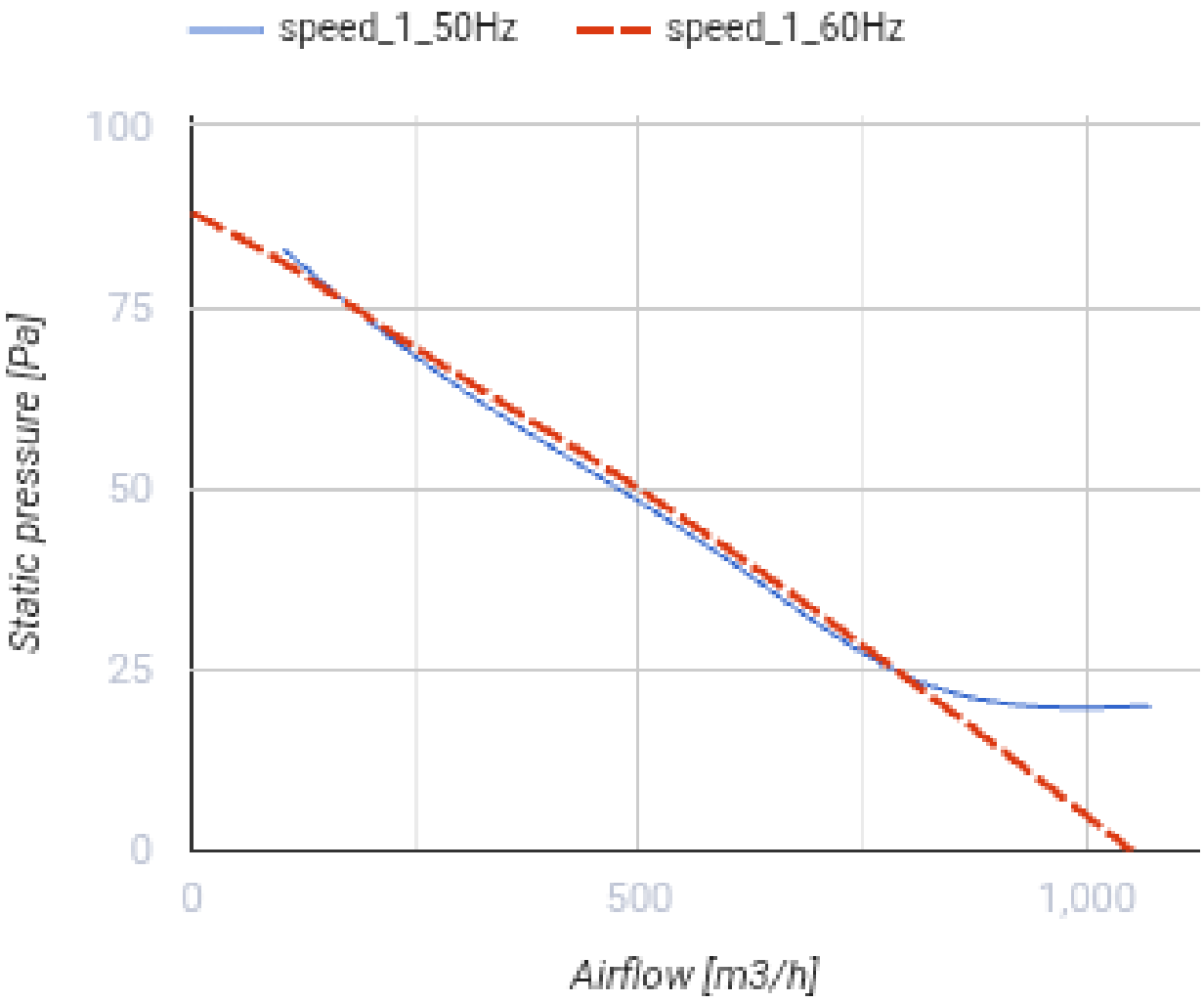
speed_1_50Hz
speed_1_60Hz
100
75
50
25
0
Static pressure [Pa]
0
500
1,000
Airflow [m3/h]

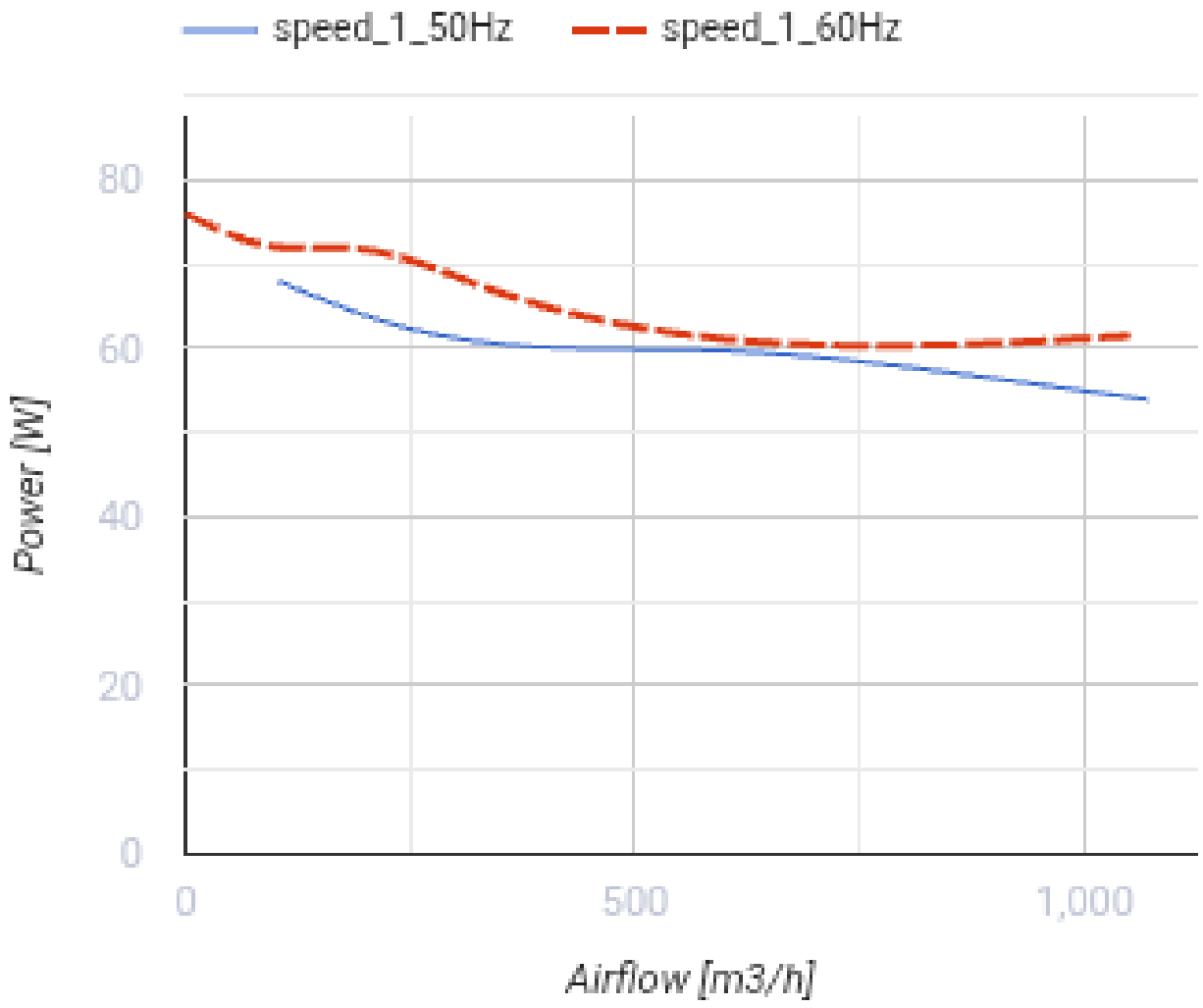


## Dimensions

| ØD | B | L | L1 | L2 |
|---|---|---|---|---|
| 262 | 283 | 270 | 55 | 30 |

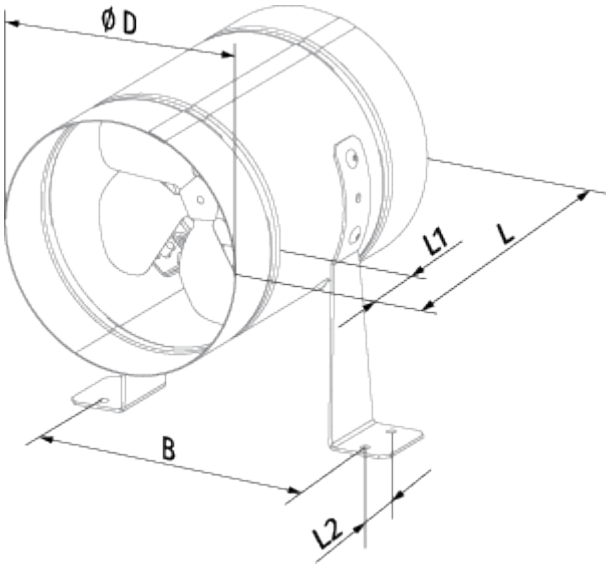
Ø D
L1
L
B
L2

## Ecodesign

| | |
|---|---|
| Trademark | Blauberg |
| Model | Tubo-MZ 250 |
| Type of drive installed | External MSD or VSD |
| Type of heat recovery system | None |
| Nominal external pressure (Pa) | 55 |
| Maximum external leakage rates (%) | 2.7 |
| Static efficiency (%) | 9.3 |
| Declared typology | NRVU UVU |
| Effective electric power input (kW) | 0.069 |
| Sound power level (dB(A)) | 68 |

## Accessories

### Transformer speed controllers

| Name | Photo | Description |
|---|---|---|
| CDR5E E3.5 TP |  | Single phase speed controller |
| CDR5E E5.0 TP |  | Single phase speed controller |
| CDR5E E7.5 TP |  | Single phase speed controller |
| CDR5E E1.5 TP |  | Single phase speed controller |