

Tubo-MZ 200

Inline axial fans

- Sound pressure level LpA at 3 m: 33
- Impeller type: Axial
- Casing material: Galvanized steel
- Installation in any position

	Unit of measurement	Tubo-MZ 200	
Speed	-	1	2
Phases	-	1	
Minimum supply voltage	V	220	
Maximum supply voltage	V	240	
Power supply frequency	Hz	50	60
Rated power	W	33	
Unit current	A	0.23	
Maximum airflow	m^3/h	390	
Rotation speed at 50hz	-	1410	
Sound pressure level LpA at 3 m	dB(A)	33	
Weight	kg	2.54	
Transported air temperature (max)	°C	40	
Transported air temperature (min)	°C	-30	
Ingress protection rating	-	IPX4	
Ingress protection rating of the drive	-	IP44	
Impeller material	-	Aluminium	

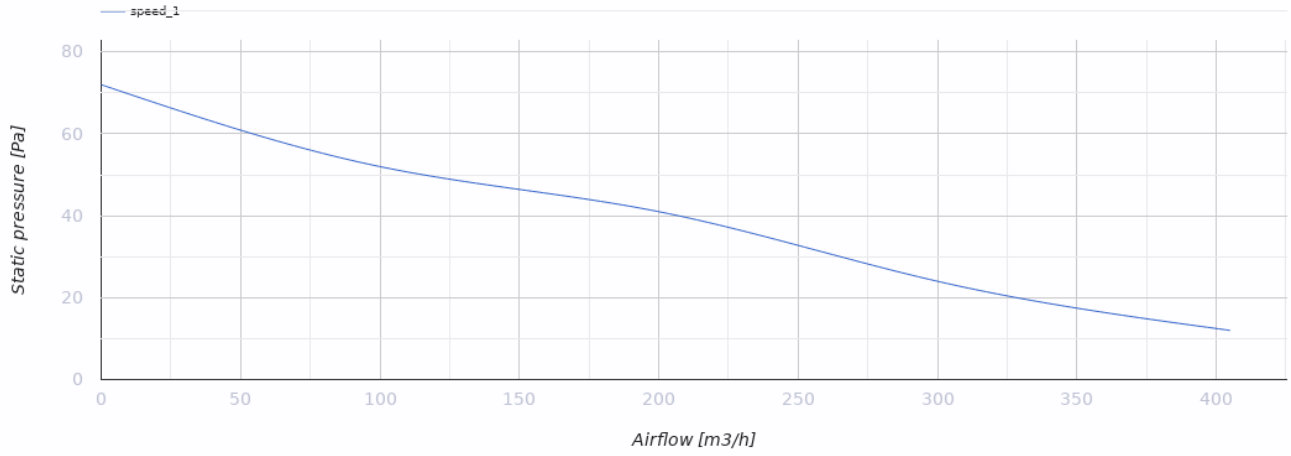

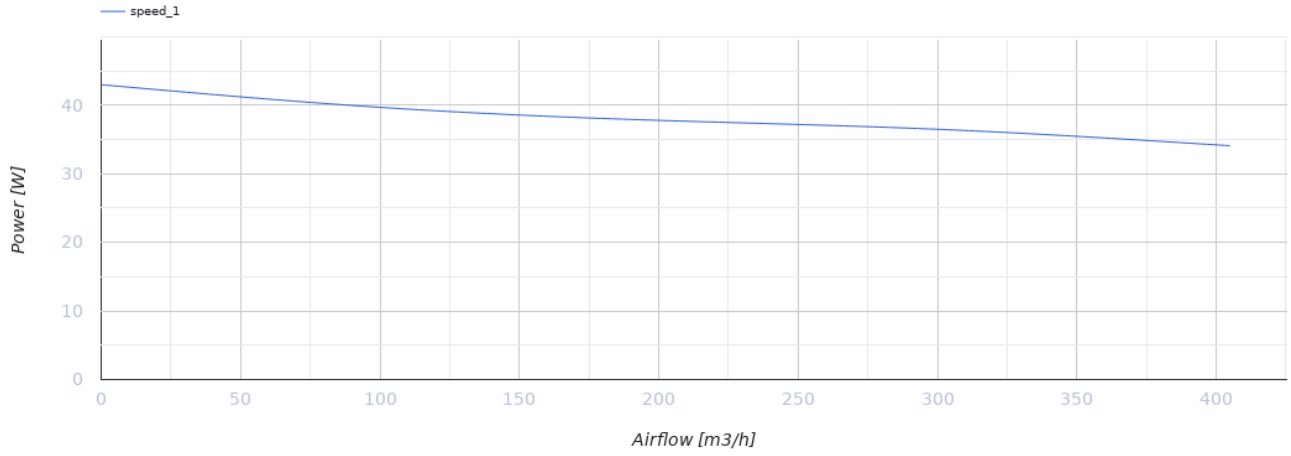

Dimensions

ØD	B	L	L1	L2
208	228	220	40	30

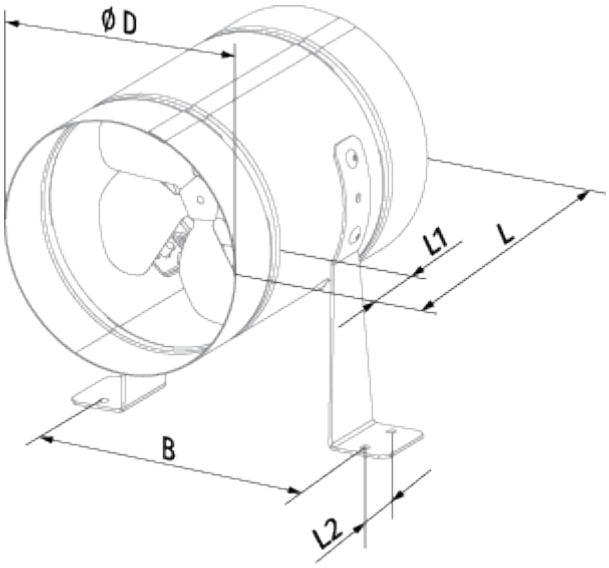
Ø D
L1
L
B
L2

Ecodesign

Trademark	Blauberg
Model	Tubo-MZ 200
Type of drive installed	External MSD or VSD
Type of heat recovery system	None
Nominal external pressure (Pa)	42
Maximum external leakage rates (%)	2.7
Static efficiency (%)	8.6
Declared typology	NRVU UVU
Effective electric power input (kW)	0.027
Sound power level (dB(A))	52

Accessories

Transformer speed controllers

Name	Photo	Description
CDR5E E3.5 TP		Single phase speed controller
CDR5E E5.0 TP		Single phase speed controller
CDR5E E7.5 TP		Single phase speed controller
CDR5E E1.5 TP		Single phase speed controller