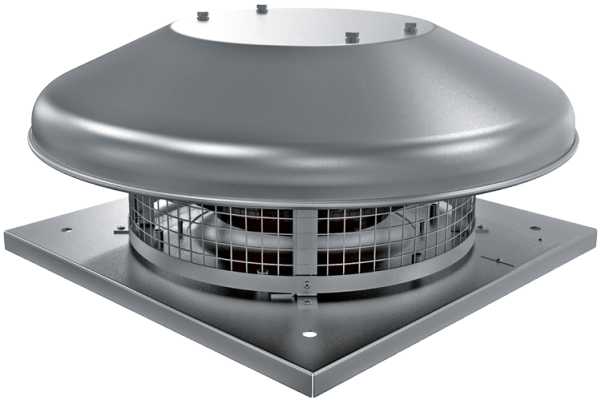

# Tower-HC 310 4E

Roof centrifugal fans

• Sound pressure level LpA at 3 m: 47
• Impeller type: Centrifugal impeller with backward curved blades
• Casing material: Coated steel

| | Unit of measurement | Tower-HC 310 4E | |
|---|---|---|---|
| Phases | - | 1 | |
| Maximum supply voltage | V | 230 | |
| Minimum supply voltage | V | 230 | |
| Power supply frequency | Hz | 50 | 60 |
| Rated power | W | 141 | |
| Unit current | A | 0.64 | |
| Maximum airflow | m³/h | 2265 | |
| Rotation speed at 50hz | - | 1420 | |
| Sound pressure level LpA at 3 m | dB(A) | 47 | |
| Weight | kg | 11 | |
| Transported air temperature (max) | °C | 50 | |
| Transported air temperature (min) | °C | -25 | |
| Ingress protection rating | - | IPX4 | |
| Ingress protection rating of the drive | - | IP44 | |
| Size | mm | 310 | |

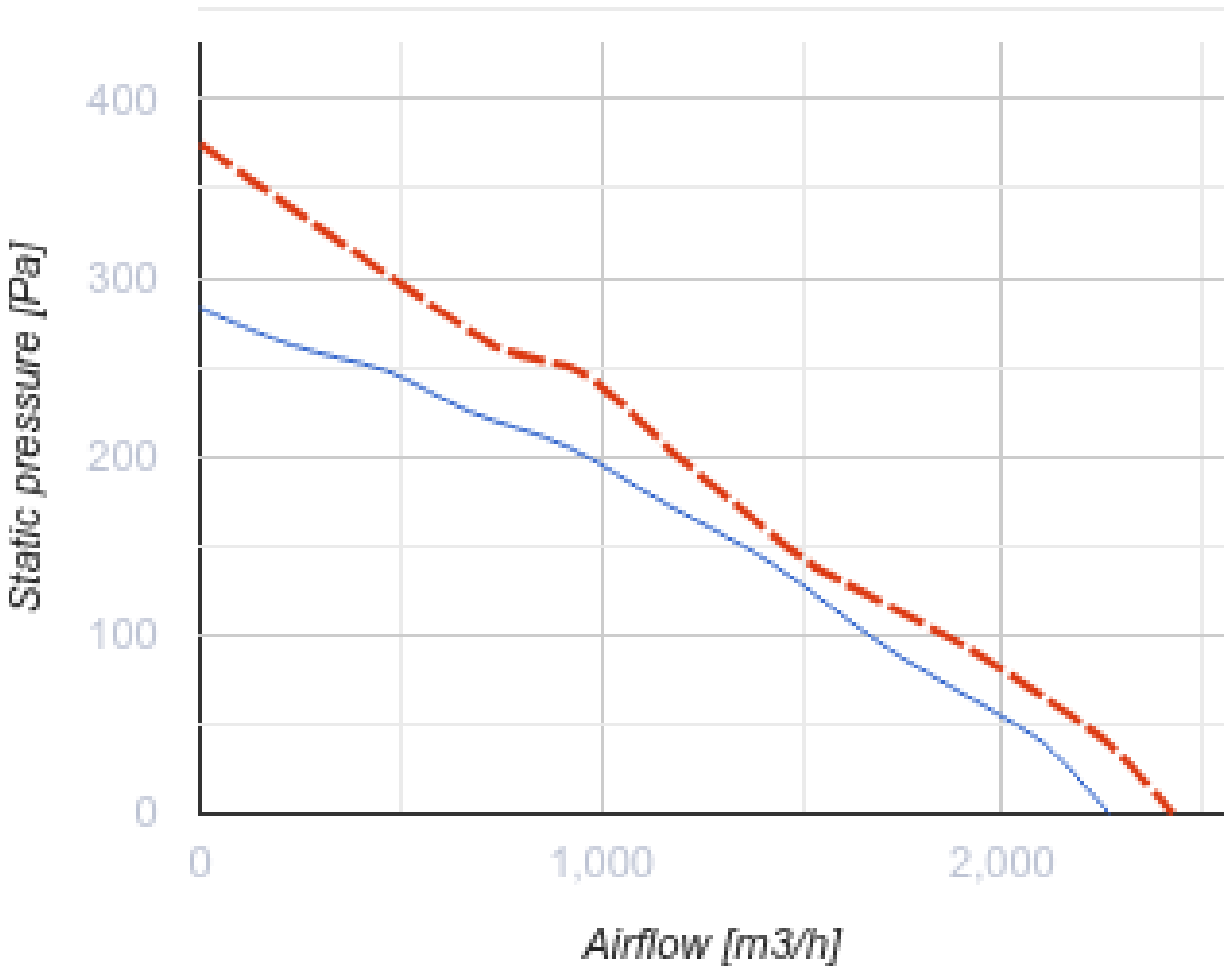
400
300
200
100
0
Static pressure [Pa]
0
1,000
2,000
Airflow [m3/h]

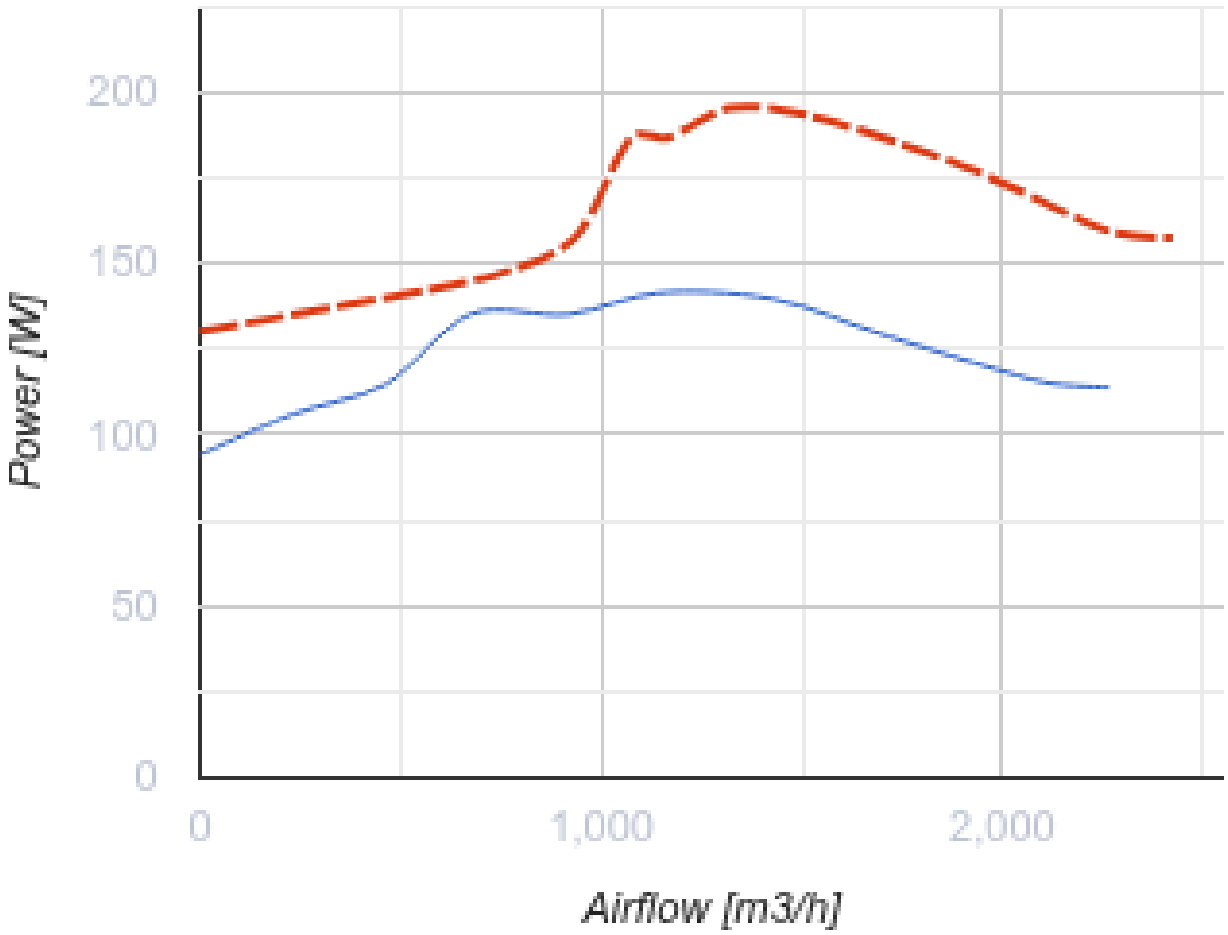


## Dimensions

| H | ØD | ØD1 | L | L1 |
|---|---|---|---|---|
| 277 | 623 | 285 | 420 | 330 |

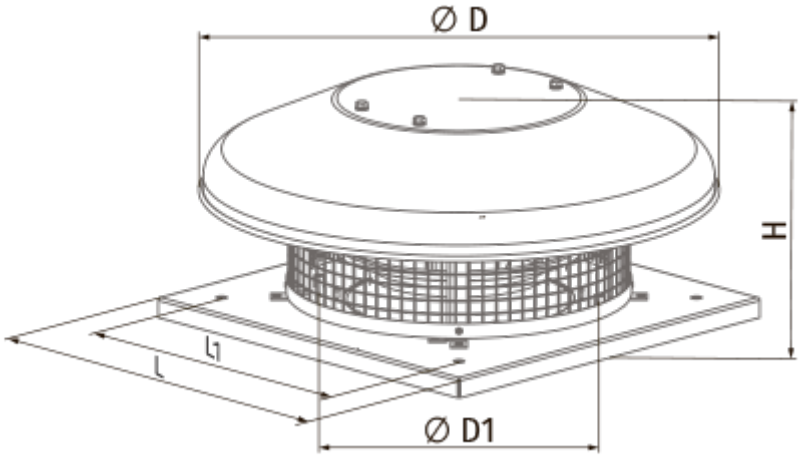
Ø D
H
L1
L
Ø D1

## Ecodesign

| | |
|---|---|
| Trademark | Blauberg |
| Model | Tower-HC 310 4E |
| Type of drive installed | External MSD or VSD |
| Type of heat recovery system | None |
| Nominal external pressure (Pa) | 176 |
| Maximum external leakage rates (%) | 2.7 |
| Static efficiency (%) | 40.4 |
| Sound power level (dB(A)) | 67 |
| Declared typology | NRVU UVU |
| Effective electric power input (kW) | 0.141 |