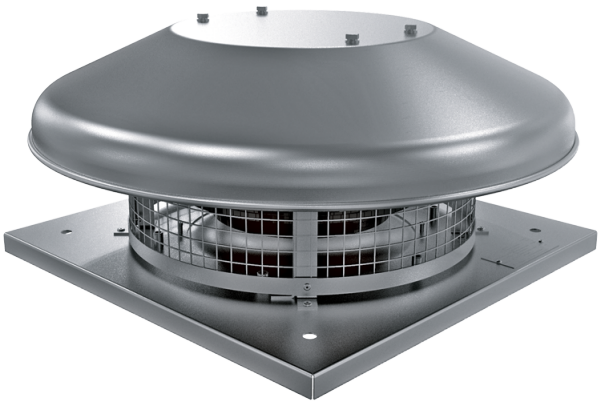

Tower-HC 280 4E A

Roof centrifugal fans

• Sound pressure level LpA at 3 m: 46
• Impeller type: Centrifugal impeller with backward curved blades
• Casing material: Aluminium

	Unit of measurement	Tower-HC 280 4E A	
Phases	-	1	
Minimum supply voltage	V	230	
Maximum supply voltage	V	230	
Power supply frequency	Hz	50	60
Rated power	W	125	
Unit current	A	0.61	
Maximum airflow	m³/h	1500	
Rotation speed at 50hz	-	1446	
Sound pressure level LpA at 3 m	dB(A)	46	
Weight	kg	10	
Transported air temperature (max)	°C	50	
Transported air temperature (min)	°C	-25	
Ingress protection rating	-	IPX4	
Ingress protection rating of the drive	-	IP44	
Size	mm	280	

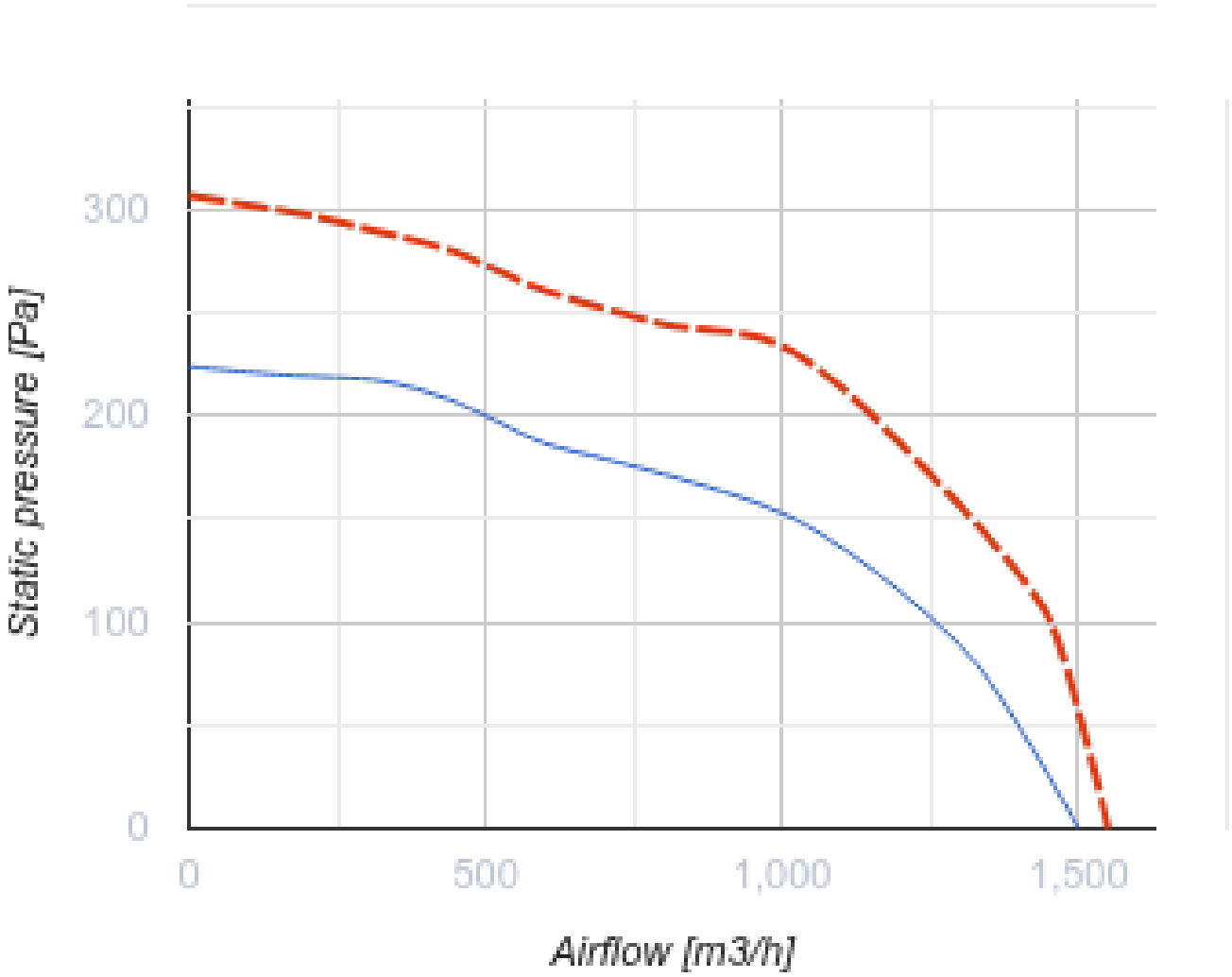
Static pressure [Pa]
300
200
100
0
0
500
1,000
1,500
Airflow [m3/h]

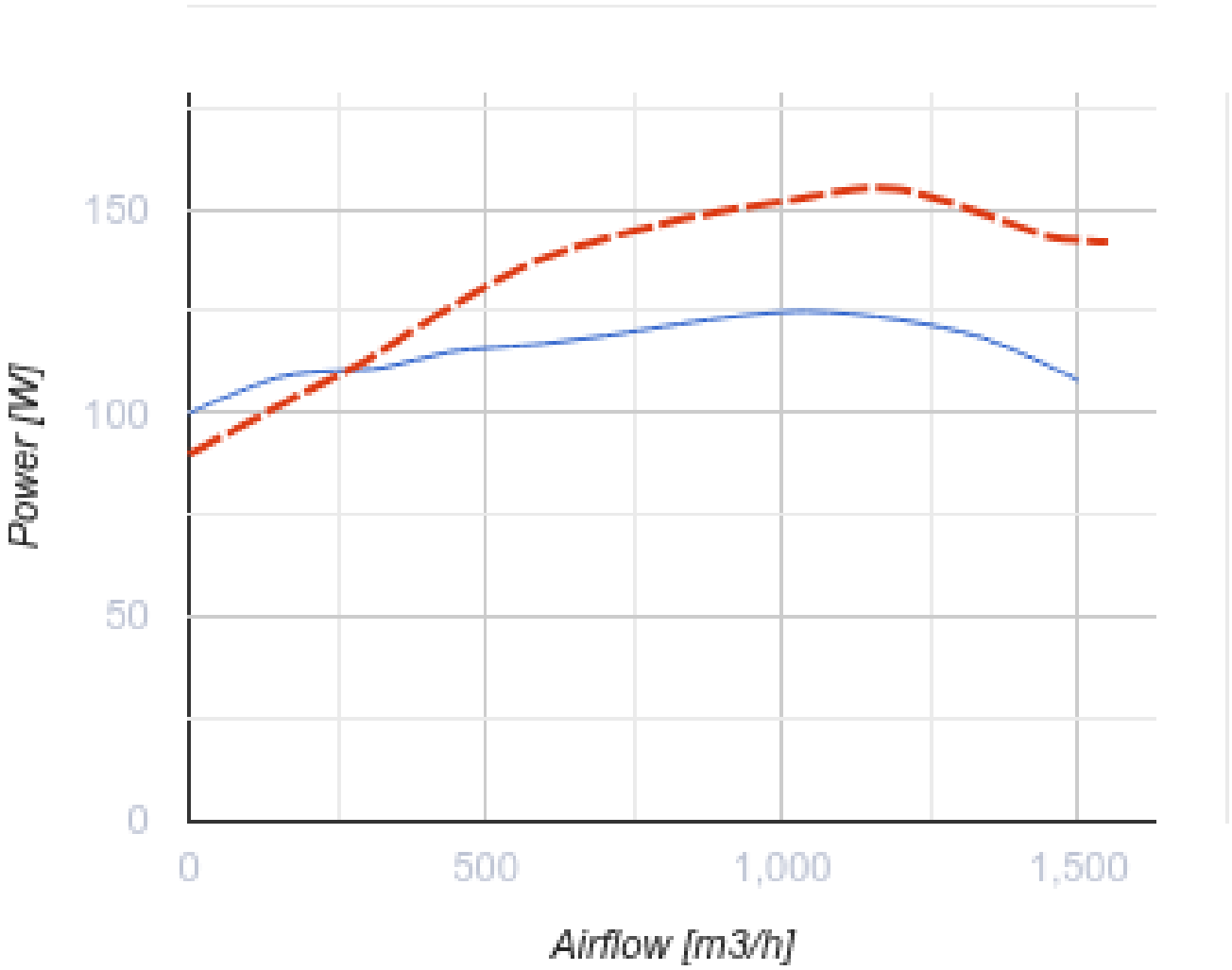

Dimensions

H	ØD	ØD1	L	L1
255	623	285	420	330

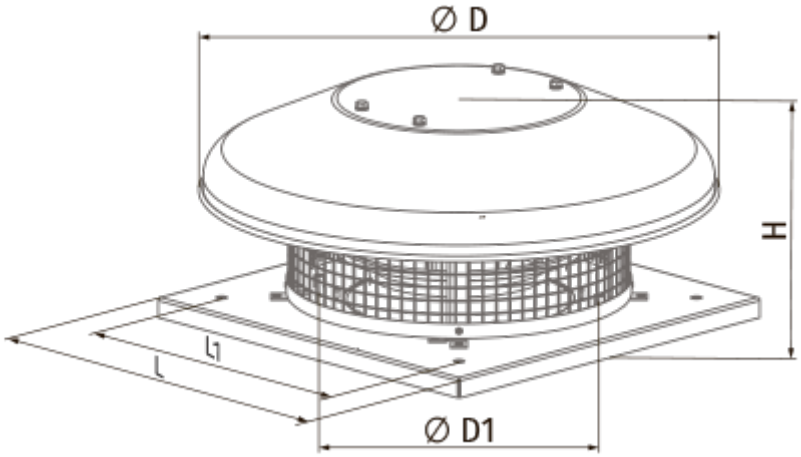
Ø D
H
L1
L
Ø D1

Ecodesign

Trademark	Blauberg
Model	Tower-HC 280 4E A
Type of drive installed	Integrated VSD
Type of heat recovery system	None
Nominal external pressure (Pa)	99
Maximum external leakage rates (%)	2.7
Static efficiency (%)	33.2
Declared typology	NRVU UVU
Effective electric power input (kW)	0.047
Sound power level (dB(A))	58