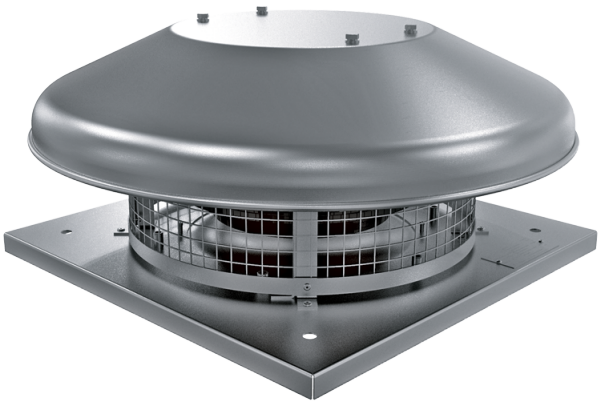

Tower-HC 190 2E A

Roof centrifugal fans

- Sound pressure level LpA at 3 m: 48
- Impeller type: Centrifugal impeller with backward curved blades
- Casing material: Aluminium

	Unit of measurement	Tower-HC 190 2E A	
Phases	-	1	
Minimum supply voltage	V	230	
Maximum supply voltage	V	230	
Power supply frequency	Hz	50	60
Rated power	W	64	
Unit current	A	0.29	
Maximum airflow	m³/h	670	
Rotation speed at 50hz	-	2730	
Sound pressure level LpA at 3 m	dB(A)	48	
Weight	kg	6	
Transported air temperature (max)	°C	50	
Transported air temperature (min)	°C	-25	
Ingress protection rating	-	IPX4	
Ingress protection rating of the drive	-	IP44	
Size	mm	190	

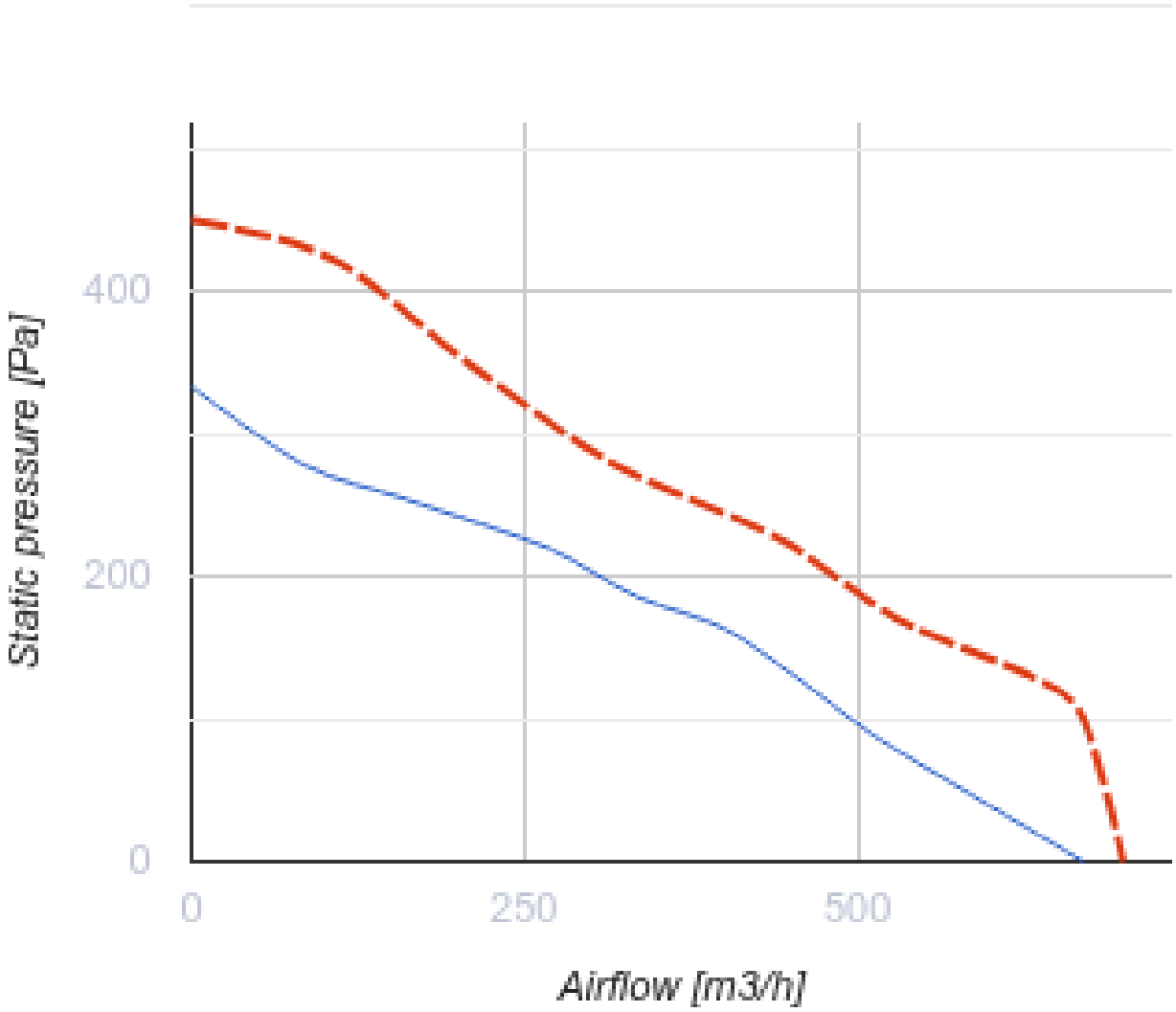
Static pressure [Pa]
400
200
0
0
250
500
Airflow [m3/h]

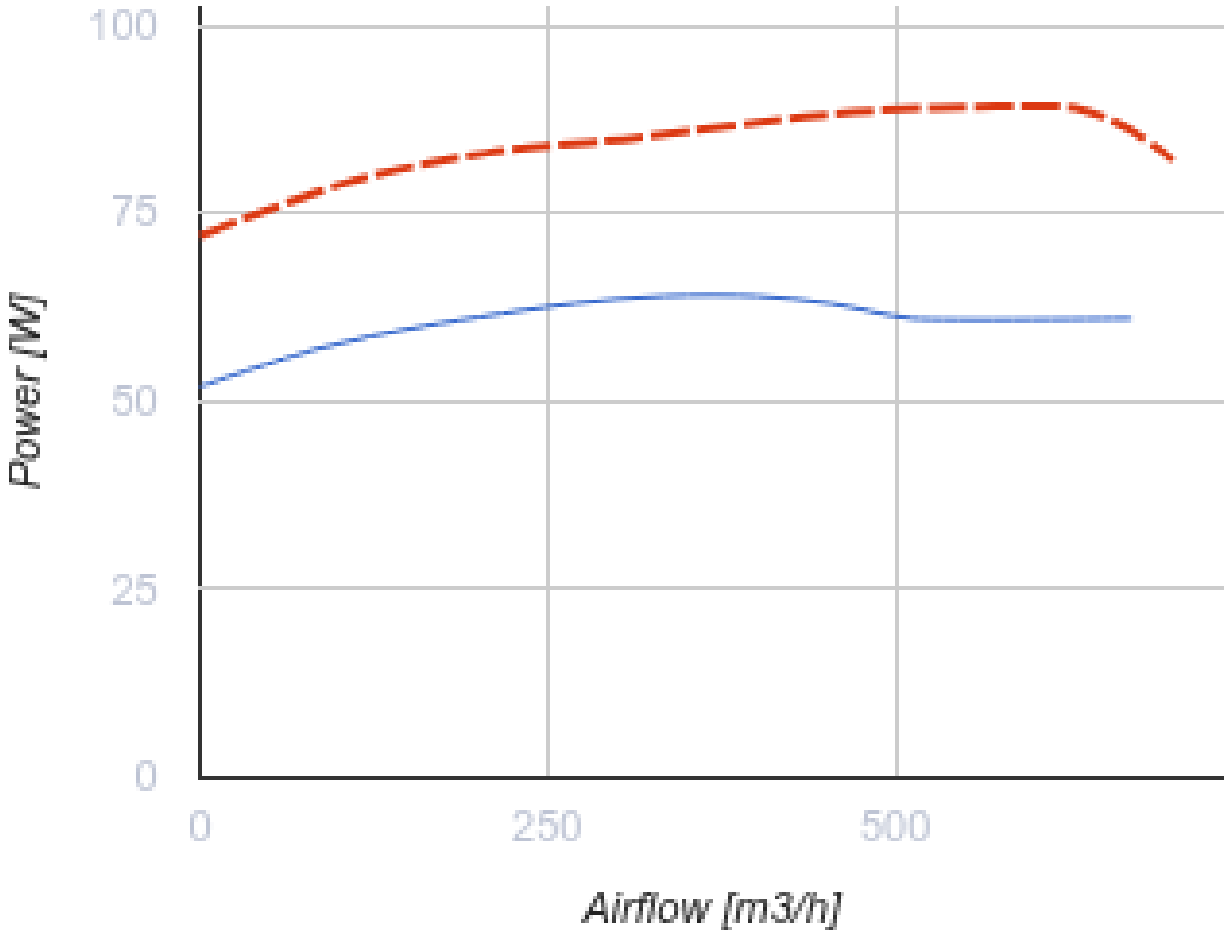

Dimensions

H	ØD	ØD1	L	L1
178	503	210	330	245

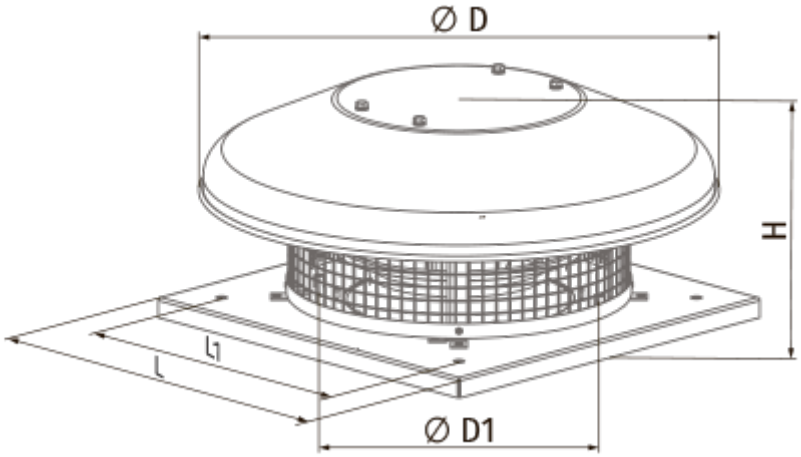
Ø D
H
L1
L
Ø D1