

Slim 150

Extract fans

- Sound pressure level LpA at 3 m: 37
- Casing material: Plastic
- Backdraft protection: Backdraft damper

	Unit of measurement	Slim 150
Connected air duct size	mm	150
Maximum supply voltage	V	240
Minimum supply voltage	V	220
Power supply frequency	Hz	50
Rated power	W	24
Unit current	A	0.13
Maximum airflow	m³/h	305
Sound pressure level LpA at 3 m	dB(A)	37
Ambient air temperature min	°C	1
Ambient air temperature max	°C	40
Ingress protection rating	-	IP24
Impeller material	-	Plastic

Dimensions

a	c	Ø d	e
205	118	150	13

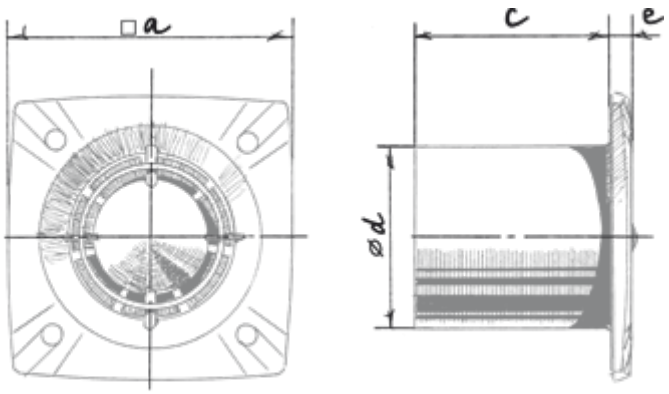
□a
c
e
ød

Ecodesign

Trademark	Blauberg					
Model	Slim 150					
Specific energy consumption (SEC) (kWh/(m²/a))	Cold		Average		Warm	
	-31.1	B	-14.7	E	-5.3	F
Type of ventilation unit	Unidirectional					
Type of drive installed	Single speed					
Type of heat recovery system	None					
Maximum flow rate (m³/h)	305					
Electric power input (W)	24					
Reference flow rate (m³/s)	0.059					
Specific power input (SPI) (W/(m³/h))	0.079					
Control typology	Manual control					
Maximum external leakage rates (%)	2.7					
Declared typology	RVU UVU					
Sound power level (dB(A))	57					
The annual electricity consumption (AEC) (kWh/a)	Cold		Average		Warm	
	99		99		99	
The annual heating saved (AHS) (kWh/a)	Cold		Average		Warm	
	3355		1715		776	