

Slim 125 ST

Extract fans

- Sound pressure level LpA at 3 m: 34
- Casing material: Plastic
- Backdraft protection: Backdraft damper
- Pull cord
- Timer: Turn off timer

	Unit of measurement	Slim 125 ST
Connected air duct size	mm	125
Maximum supply voltage	V	240
Minimum supply voltage	V	220
Power supply frequency	Hz	50
Rated power	W	16
Unit current	A	0.1
Maximum airflow	m³/h	190
Sound pressure level LpA at 3 m	dB(A)	34
Ambient air temperature min	°C	1
Ambient air temperature max	°C	40
Ingress protection rating	-	IP24
Impeller material	-	Plastic

Dimensions

a	c	Ø d	e
176	101	125	13

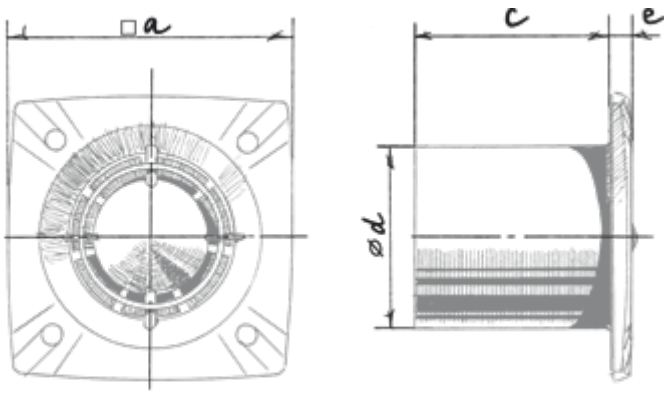
□a
c
e
ød

Ecodesign

Trademark	Blauberg					
Model	Slim 125 ST					
Specific energy consumption (SEC) (kWh/(m²/a))	Cold		Average		Warm	
	-34.2	A	-16.2	E	-6	F
Type of ventilation unit	Unidirectional					
Type of drive installed	Single speed					
Type of heat recovery system	None					
Maximum flow rate (m³/h)	190					
Electric power input (W)	16					
Reference flow rate (m³/s)	0.037					
Specific power input (SPI) (W/(m³/h))	0.084					
Control typology	Clock control					
Maximum external leakage rates (%)	2.7					
Declared typology	RVU UVU					
Sound power level (dB(A))	54					
The annual electricity consumption (AEC) (kWh/a)	Cold		Average		Warm	
	100		100		100	
The annual heating saved (AHS) (kWh/a)	Cold		Average		Warm	
	3667		1874		848	