

Sileo Design DC 100 T

High-performance low noise extract fans with DC motors

- Sound pressure level LpA at 3 m: 26
- Impeller type: Mixed-flow
- Casing material: Plastic
- Backdraft protection: Backdraft damper
- Timer: Turn off timer

	Unit of measurement	Sileo Design DC 100 T	
Speed	-	1	2
Connected air duct size	mm	100	
Maximum supply voltage	V	240	
Minimum supply voltage	V	220	
Power supply frequency	Hz	50/60	
Rated power	W	1.5	2.7
Unit current	A	0.026	0.04
Maximum airflow	m³/h	58	93
Rotation speed at 50hz	-	1850	2650
Sound pressure level LpA at 3 m	dB(A)	21	26
Ambient air temperature min	°C	1	
Ambient air temperature max	°C	40	
Ingress protection rating	-	IP45	
Impeller material	-	Plastic	

Dimensions

Ø D	B	L	L1
99	200	131	50

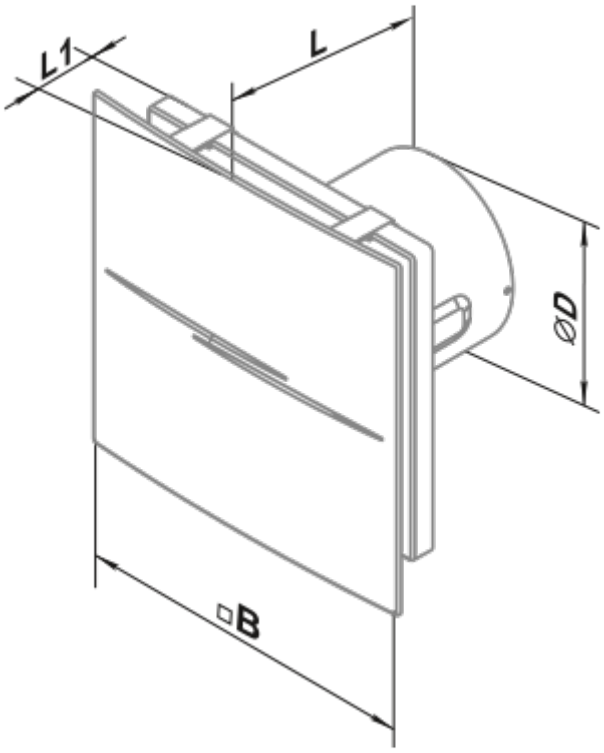
L1
L
ØD
□B

Ecodesign

Trademark	Blauberg					
Model	Sileo Design DC 100 T					
Specific energy consumption (SEC) (kWh/(m²/a))	Cold		Average		Warm	
	-35.9	A	-18	E	-7.7	F
Type of ventilation unit	Unidirectional					
Type of drive installed	2-speed					
Type of heat recovery system	None					
Maximum flow rate (m³/h)	93					
Electric power input (W)	2.7					
Reference flow rate (m³/s)	0.016					
Specific power input (SPI) (W/(m³/h))	0.026					
Control typology	Clock control					
Maximum external leakage rates (%)	2.7					
Declared typology	RVU UVU					
Sound power level (dB(A))	41					
The annual electricity consumption (AEC) (kWh/a)	Cold		Average		Warm	
	30		30		30	
The annual heating saved (AHS) (kWh/a)	Cold		Average		Warm	
	3667		1874		848	