

# Qubit-E 35/60 TH

High-pressure extract centrifugal Qubit fans for air duct systems of high durability

- Sound pressure level LpA at 3 m: 21
- Impeller type: Centrifugal impeller with forward curved blades
- Casing material: Plastic
- Backdraft protection: Backdraft damper
- Humidity sensor
- Timer: Turn on timer, Turn off timer, Internal timer

| | Unit of measurement | Qubit-E 35/60 TH | |
|---|---|---|---|
| Speed | - | 1 | 2 |
| Maximum supply voltage | V | 240 | |
| Minimum supply voltage | V | 220 | |
| Power supply frequency | Hz | 50 | |
| Rated power | W | 11 | 20 |
| Unit current | A | 0.068 | 0.089 |
| Maximum airflow | m³/h | 35 | 60 |
| Sound pressure level LpA at 3 m | dB(A) | 15 | 21 |
| Ambient air temperature max | °C | 40 | |
| Ambient air temperature min | °C | 1 | |
| Ingress protection rating | - | IP45 | |
| Impeller material | - | Plastic | |

## Dimensions

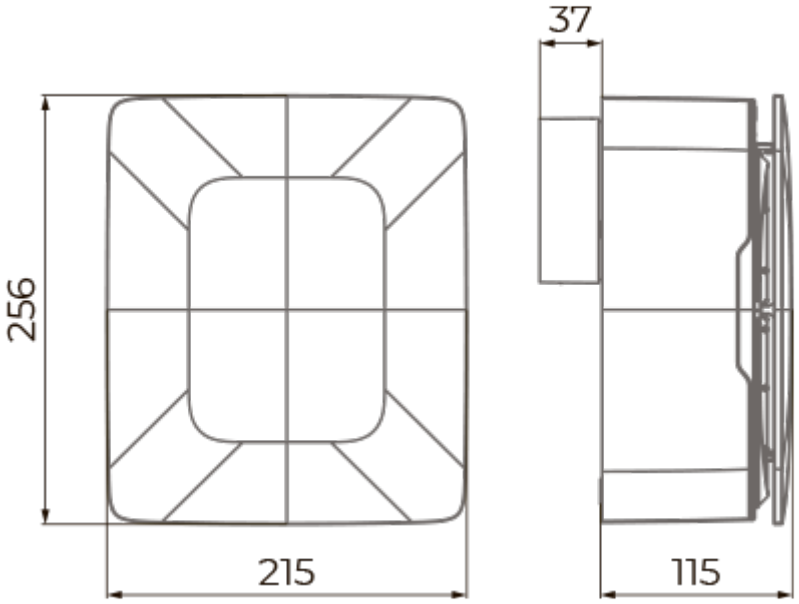


## Accessories

### Speed control switches

| Name | Photo | Description |
|---|---|---|
| CDP-2/5 |  | Multi-speed switch |

### Fittings

| Name | Photo | Description |
|---|---|---|
| K 100 |  | Clamp for round flexible ducts |

### Flexible ducts

| Name | Photo | Description |
|---|---|---|
| BlauFlex AN 100/3 |  | Flexible air ducts BlauFlex |