

Primo 250

Mixed-flow inline fans

- Sound pressure level LpA at 3 m: 43
- Impeller type: Mixed-flow
- Casing material: Polypropylene
- Installation in any position

	Unit of measurement	Primo 250		
Speed	-	1	2	3
Connected air duct size	mm	250		
Phases	-	1		
Minimum supply voltage	V	230		
Maximum supply voltage	V	230		
Power supply frequency	Hz	50		
Rated power	W	144	173	188
Unit current	A	0.70	0.81	0.84
Maximum airflow	m³/h	1038	1447	1715
Rotation speed at 50hz	-	2292	2626	2876
Sound pressure level LpA at 3 m	dB(A)	39	41	43
Weight	kg	6.4		
Transported air temperature (max)	°C	55		
Transported air temperature (min)	°C	-25		
Ingress protection rating	-	IPX4		
Ingress protection rating of the drive	-	IP20		
Impeller material	-	Plastic		

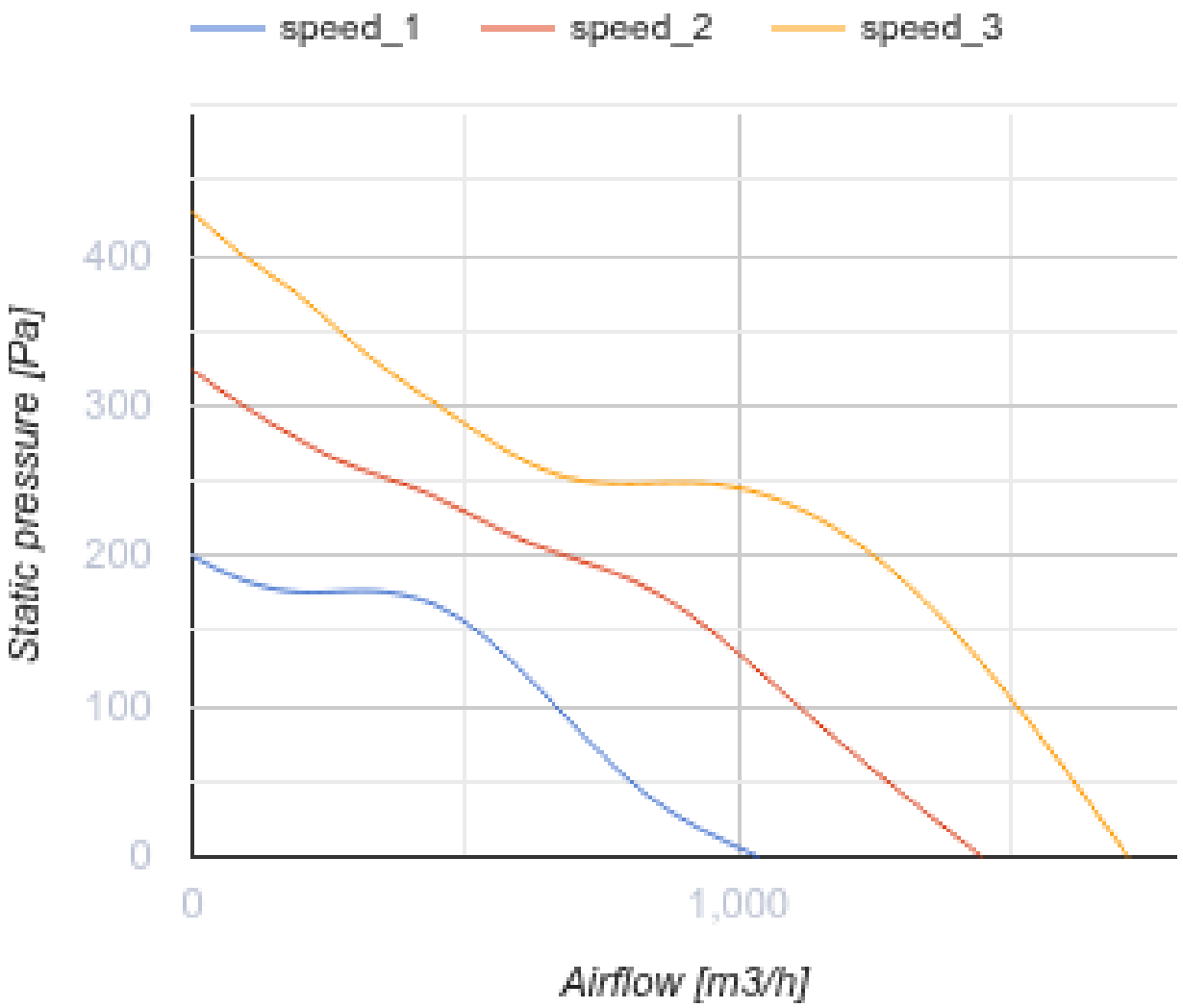
speed_1
speed_2
speed_3
400
300
200
100
0
Static pressure [Pa]
0
1,000
Airflow [m3/h]

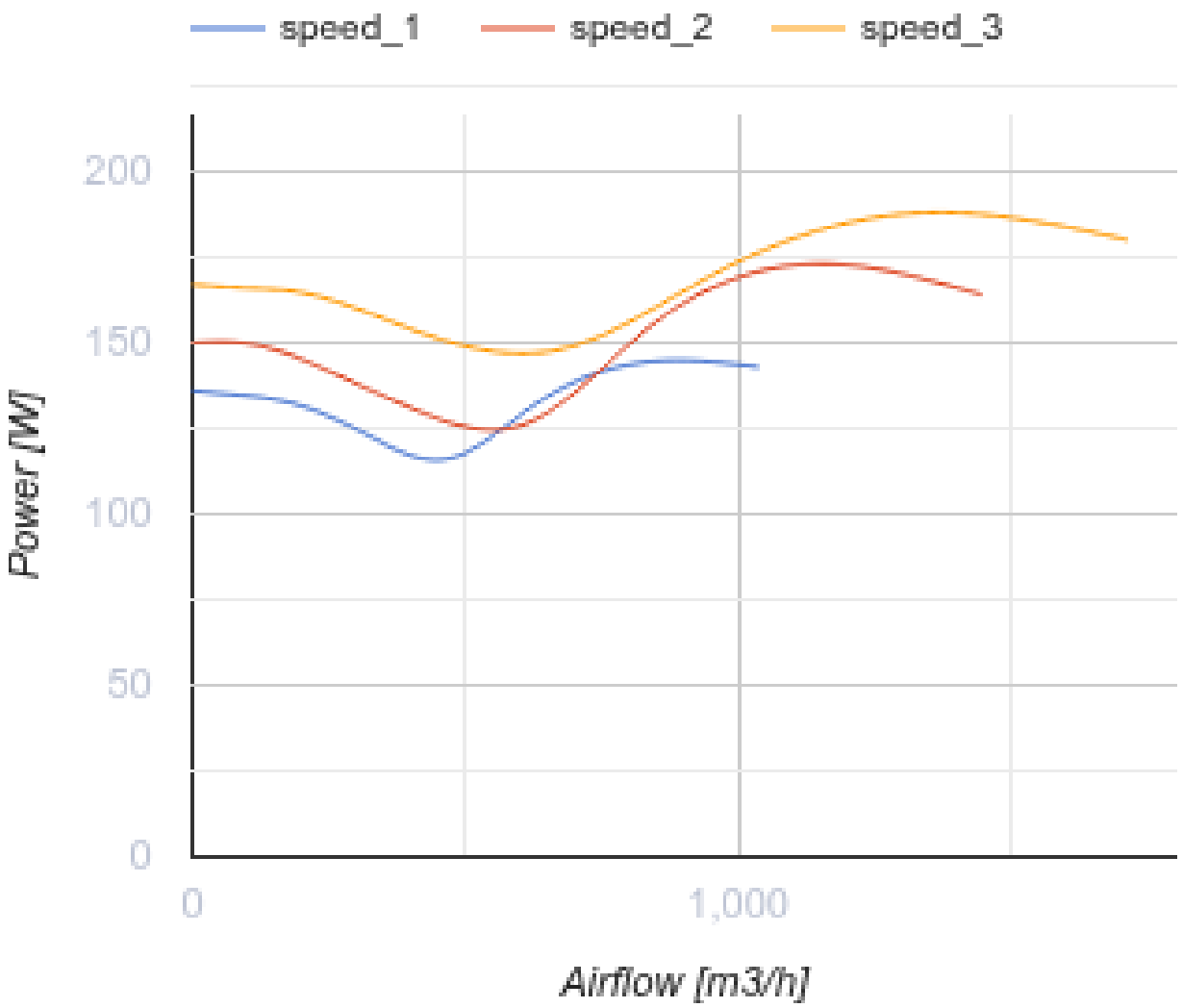

Dimensions

A	B	C	Ø D
342	293	326	250

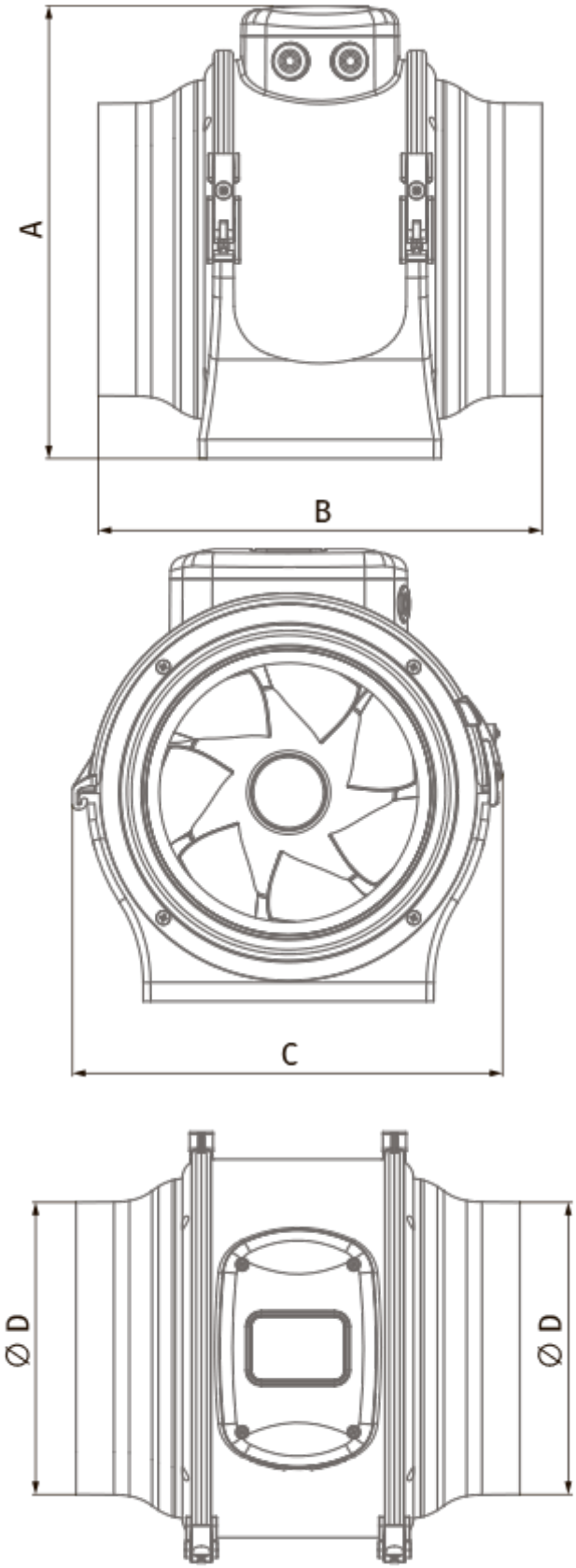
A
B
C
Ø D
Ø D

Ecodesign

Trademark	Blauberg
Model	Primo 250
Type of ventilation unit	Unidirectional
Type of drive installed	Integrated VSD
Type of heat recovery system	None
Nominal external pressure (Pa)	248
Maximum external leakage rates (%)	2.7
Static efficiency (%)	39.5
Declared typology	NRVU UVU
Effective electric power input (kW)	0.17
Sound power level (dB(A))	62

Accessories

For round ducts

Name	Photo	Description
SD 250/600		Silencers for round ducts
SD 250/900		Silencers for round ducts
SD 250/1200		Silencers for round ducts

For round ducts

Name	Photo	Description
KFBK 250		Filter boxes for round ducts
KFBT 250 G4		Filter boxes with pocket filters for round ducts

KFBT 250 F5		Filter boxes with pocket filters for round ducts
KFBT 250 F7		Filter boxes with pocket filters for round ducts

For round ducts

Name	Photo	Description
VRV 250		Backdraft dampers with spring for round ducts

For round ducts

Name	Photo	Description
VKA 250		Air dampers for round ducts

Water heaters

Name	Photo	Description
WKH 250-2		Duct water heaters for round ducts
WKH 250-4		Duct water heaters for round ducts

Electrical heaters

Name	Photo	Description
EKH 250-1.2		Duct electrical heaters for round ducts
EKH 250-2.0		Duct electrical heaters for round ducts
EKH 250-2.4		Duct electrical heaters for round ducts
EKH 250-3.0		Duct electrical heaters for round ducts

EKH 250-3.6		Duct electrical heaters for round ducts
EKH 250-6.0		Duct electrical heaters for round ducts
EKH 250-9.0		Duct electrical heaters for round ducts

Thyristor speed controllers

Name	Photo	Description
CDT1 E1.5		Multi-speed switches

Speed control switches

Name	Photo	Description
CDP-3/5		Multi-speed switch