

Primo 100 G1

Mixed-flow inline fans

- Sound pressure level LpA at 3 m: 26
- Impeller type: Mixed-flow
- Casing material: Polypropylene
- Installation in any position
- Temperature sensor: Remote

	Unit of measurement	Primo 100 G1		
Speed	-	1	2	3
Connected air duct size	mm	100		
Phases	-	1		
Maximum supply voltage	V	230		
Minimum supply voltage	V	230		
Power supply frequency	Hz	50		
Rated power	W	9	12	23
Unit current	A	0.80	0.90	0.10
Maximum airflow	m³/h	116	165	240
Rotation speed at 50hz	-	2299	2671	2819
Sound pressure level LpA at 3 m	dB(A)	20	22	26
Weight	kg	3.7		
Transported air temperature (max)	°C	55		
Transported air temperature (min)	°C	-25		
Ingress protection rating	-	IPX4		
Ingress protection rating of the drive	-	IP20		
Impeller material	-	Plastic		

Dimensions

A	B	C	Ø D
262	330	226	100

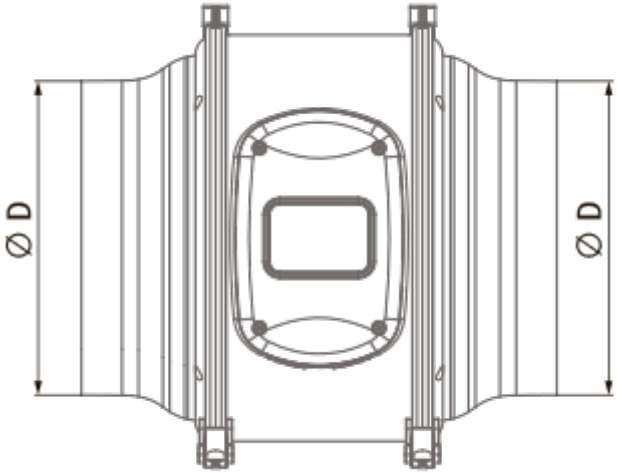

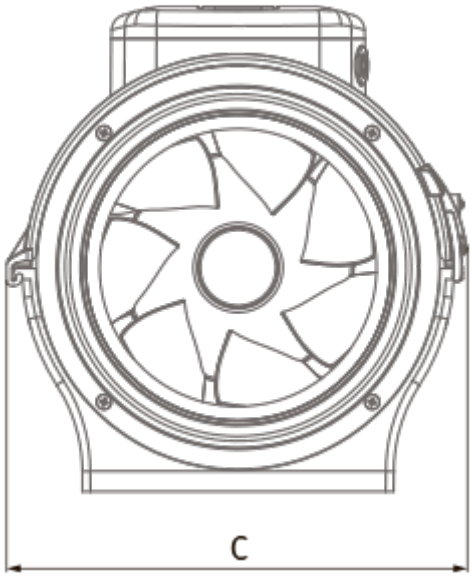

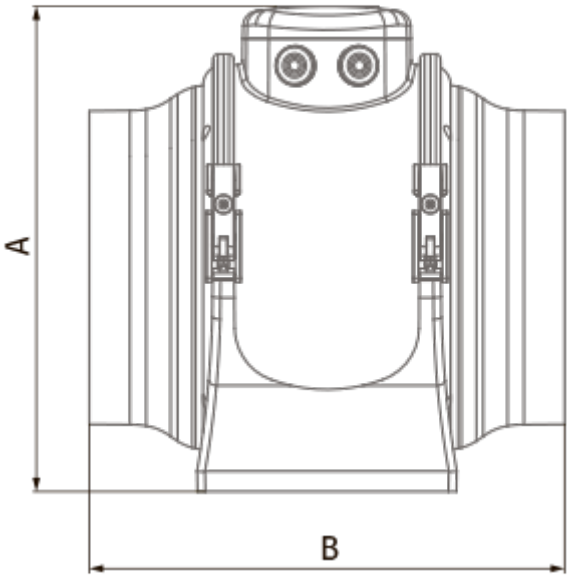

Accessories

For round ducts

Name	Photo	Description
SD 100/600		Silencers for round ducts
SD 100/900		Silencers for round ducts
SD 100/1200		Silencers for round ducts

For round ducts

Name	Photo	Description
KFBK 100		Filter boxes for round ducts
KFBT 100 G4		Filter boxes with pocket filters for round ducts
KFBT 100 F5		Filter boxes with pocket filters for round ducts

KFBT 100 F7		Filter boxes with pocket filters for round ducts

For round ducts

Name	Photo	Description
VRV 100		Backdraft dampers with spring for round ducts

For round ducts

Name	Photo	Description
VKA 100		Air dampers for round ducts

Water heaters

Name	Photo	Description
WKH 100-2		Duct water heaters for round ducts
WKH 100-4		Duct water heaters for round ducts

Electrical heaters

Name	Photo	Description
EKH 100-0.6		Duct electrical heaters for round ducts
EKH 100-0.8		Duct electrical heaters for round ducts
EKH 100-1.2		Duct electrical heaters for round ducts
EKH 100-1.6		Duct electrical heaters for round ducts

EKH 100-1.8		Duct electrical heaters for round ducts

Thyristor speed controllers

Name	Photo	Description
CDT1 E1.5		Multi-speed switches

Speed control switches

Name	Photo	Description
CDP-3/5		Multi-speed switch

Fittings

Name	Photo	Description
K 100		Clamp for round flexible ducts