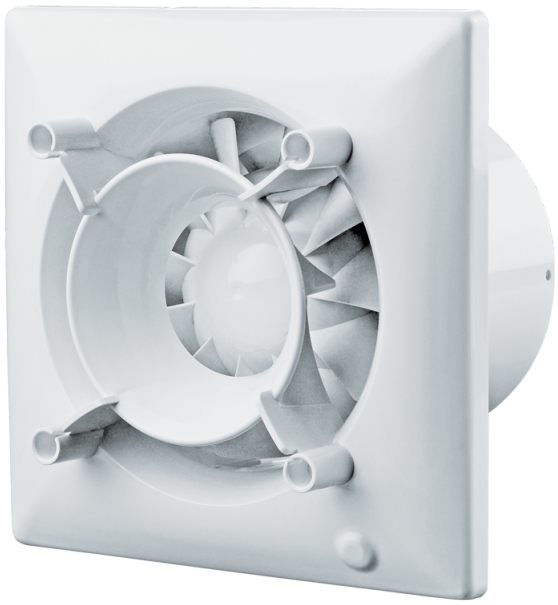

Omega 100

Quiet extract fan

- Sound pressure level LpA at 3 m: 29
- Impeller type: Mixed-flow
- Casing material: Plastic
- Backdraft protection: Backdraft damper

	Unit of measurement	Omega 100
Connected air duct size	mm	100
Maximum supply voltage	V	240
Minimum supply voltage	V	220
Power supply frequency	Hz	50
Rated power	W	8
Unit current	A	0.05
Maximum airflow	m³/h	90
Rotation speed at 50hz	-	2165
Sound pressure level LpA at 3 m	dB(A)	29
Ambient air temperature min	°C	1
Ambient air temperature max	°C	40
Ingress protection rating	-	IP44
Impeller material	-	Plastic

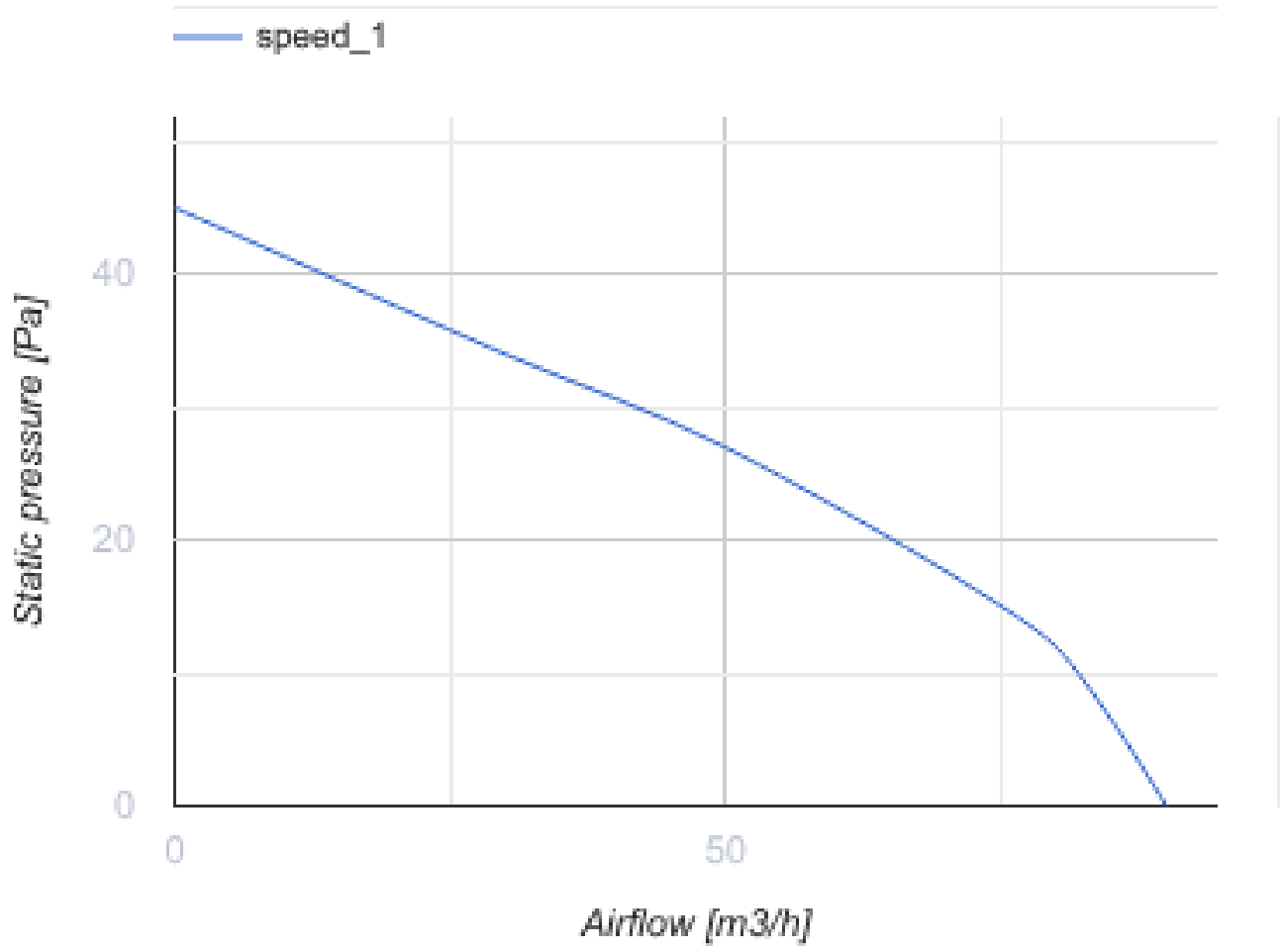

Dimensions

a	Ød	b	c
150	99	79	36

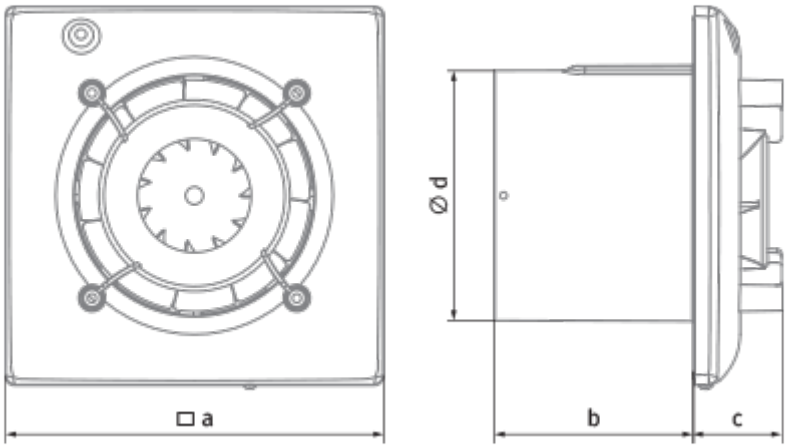

Ecodesign

Trademark	Blauberg					
Model	Omega 100					
Specific energy consumption (SEC) (kWh/(m²/a))	Cold		Average		Warm	
	-30.8	B	-14.4	E	-5	F
Type of ventilation unit	Unidirectional					
Type of drive installed	Single speed					
Type of heat recovery system	None					
Maximum flow rate (m³/h)	90					
Electric power input (W)	8					
Reference flow rate (m³/s)	0.018					
Specific power input (SPI) (W/(m³/h))	0.089					
Control typology	Manual control					
Maximum external leakage rates (%)	2.7					
Declared typology	RVU UVU					
Sound power level (dB(A))	49					
The annual electricity consumption (AEC) (kWh/a)	Cold		Average		Warm	
	111		111		111	
The annual heating saved (AHS) (kWh/a)	Cold		Average		Warm	
	3355		1715		776	

Accessories

Decorative panels

Name	Photo	Description
DP 180 Plan		Design Konzept System panels are the finishing touch of your home's ventilation design
DP 180 Plan Red		Design Konzept System panels are the finishing touch of your home's ventilation design
DP 180 Plan Cosmos Black		Design Konzept System panels are the finishing touch of your home's ventilation design

DP 180 Platinum		Design Konzept System panels are the finishing touch of your home's ventilation design
DP 180 Shield		Design Konzept System panels are the finishing touch of your home's ventilation design
DP 180 Bavaria		Design Konzept System panels are the finishing touch of your home's ventilation design
DP 180 Hi-Fi		Design Konzept System panels are the finishing touch of your home's ventilation design
DP 180 Moon		Design Konzept System panels are the finishing touch of your home's ventilation design
DP 180 Chrome		Design Konzept System panels are the finishing touch of your home's ventilation design
DP 180 Hi-Tech		Design Konzept System panels are the finishing touch of your home's ventilation design
DPO 100/180 Glas		Design Konzept System panels are the finishing touch of your home's ventilation design
DPO 100/180 Glas Red		Design Konzept System panels are the finishing touch of your home's ventilation design
DPO 100/180 Glas Black		Design Konzept System panels are the finishing touch of your home's ventilation design