

KSZ 160

Cross joint for round duct

- Casing material: Galvanized steel

	Unit of measurement	KSZ 160
Connected air duct size	mm	160

Dimensions

Ø D1	Ø D2	L
160	160	250

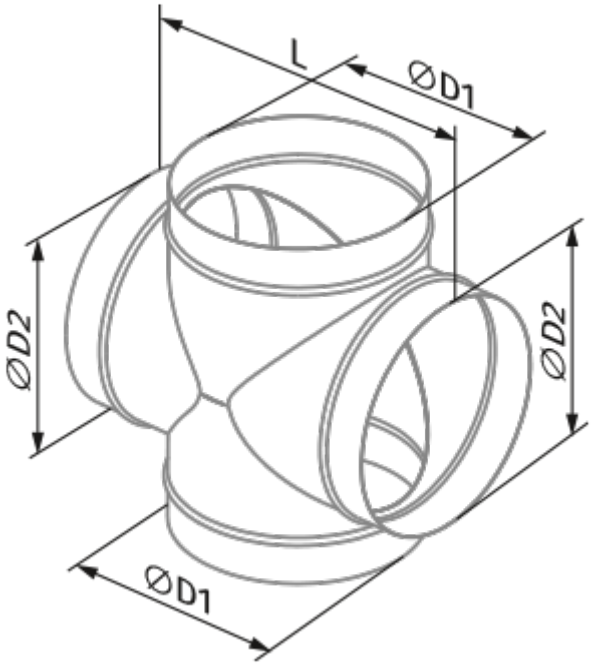
L
ØD1
ØD2
ØD2
ØD1