

KOMFORT Ultra L 250-E S1

Compact heat recovery air handling units

- Sound pressure level LpA at 3 m: 28–47
- Heat exchanger type: Cross flow
- Heat exchanger material: Enthalpy
- Supply filter: G4 (option: F8 PM2.5 > 81 %)
- Extract filter: G4
- Sound-insulated casing
- Enthalpy heat exchanger
- Control: Speed controller
- Casing material: Double-skinned aluzinc panels

	Unit of measurement	KOMFORT Ultra L 250-E S1
Connected air duct size	mm	125
Phases	-	1
Minimum supply voltage	V	230
Maximum supply voltage	V	230
Power supply frequency	Hz	50/60
Rated power	W	148
Unit current	A	0.78
Maximum airflow	m³/h	250
Sound pressure level LpA at 3 m	dB(A)	28–47
Heat recovery efficiency, max	%	73
Heat exchanger type	-	Cross flow
Heat exchanger material	-	Enthalpy
Weight	kg	25
Supply filter	-	G4 (option: F8 PM2.5 > 81 %)
Extract filter	-	G4
Transported air temperature (max)	°C	40
Transported air temperature (min)	°C	-25
Ambient air temperature min	°C	1
Ambient air temperature max	°C	40
Ingress protection rating	-	IP22
Ambient air humidity max	%	80

Ingress protection rating of the drive	-	IP44

Dimensions

D	B	H	H1	L	L1
125	300	443	43	713	810

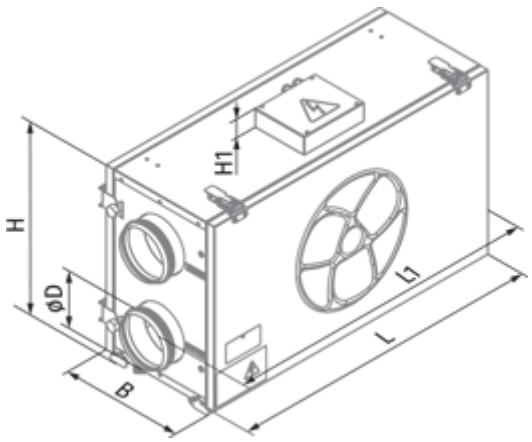

Accessories

For round ducts

Name	Photo	Description
SD 125/600		Silencers for round ducts
SD 125/900		Silencers for round ducts
SD 125/1200		Silencers for round ducts

For round ducts

Name	Photo	Description
VRV 125		Backdraft dampers with spring for round ducts

Other accessories

Name	Photo	Description

FP 240x184x40 G4		G4 panel filter