

# KOMFORT Roto EC SE 400 S21

Heat recovery air handling units

- Power of electrical reheater: 1400
- Sound pressure level LpA at 3 m: 33
- Heat exchanger type: Rotary
- Heat exchanger material: Aluminum
- Supply filter: G4 + F7
- Extract filter: G4
- Sound-insulated casing
- Reheater: Electric
- BMS protocol: ModBus
- Control: Smartphone
- Casing material: Coated steel
- Humidity sensor: Optional
- CO2 sensor: Optional
- PM2.5 sensor: Optional

| | Unit of measurement | KOMFORT Roto EC SE 400 S21 |
|---|---|---|
| Connected air duct size | mm | 160 |
| Phases | - | 1 |
| Minimum supply voltage | V | 230 |
| Maximum supply voltage | V | 230 |
| Power supply frequency | Hz | 50/60 |
| Rated power | W | 200 |
| Power of electrical reheater | W | 1400 |
| Unit current | A | 7.5 |
| Maximum airflow | m³/h | 440 |
| Sound pressure level LpA at 3 m | dB(A) | 33 |
| Heat recovery efficiency, max | % | 85 |
| Heat exchanger type | - | Rotary |
| Heat exchanger material | - | Aluminum |
| Weight | kg | 82 |
| Supply filter | - | G4 + F7 |
| Extract filter | - | G4 |
| Transported air temperature (max) | °C | 40 |
| Transported air temperature (min) | °C | -25 |
| Ambient air temperature min | °C | 1 |
| Ambient air temperature max | °C | 40 |
| Ingress protection rating | - | IP22 |

| | | |
|---|---|---|
| Ambient air humidity max | % | 80 |
| Ingress protection rating of the drive | - | IP44 |

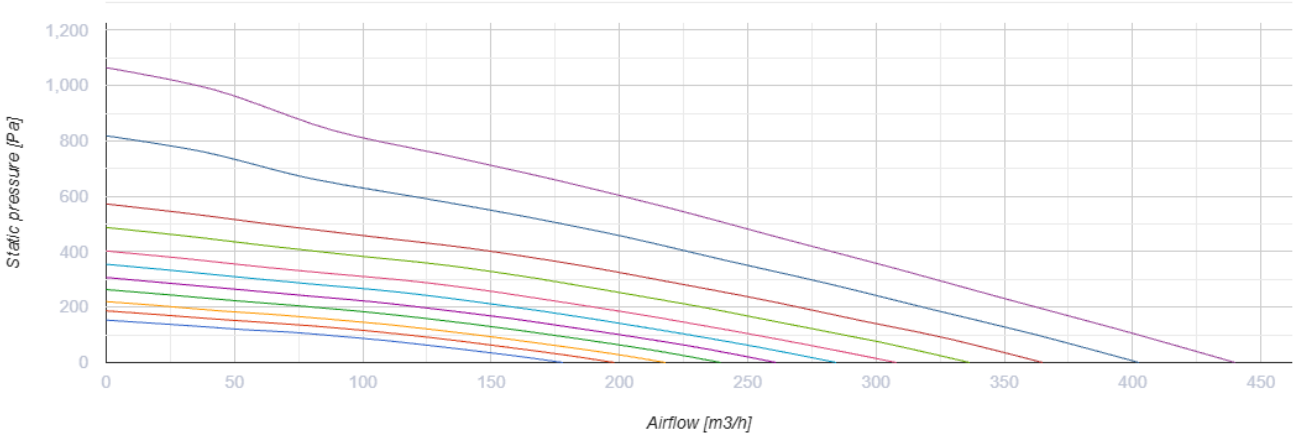


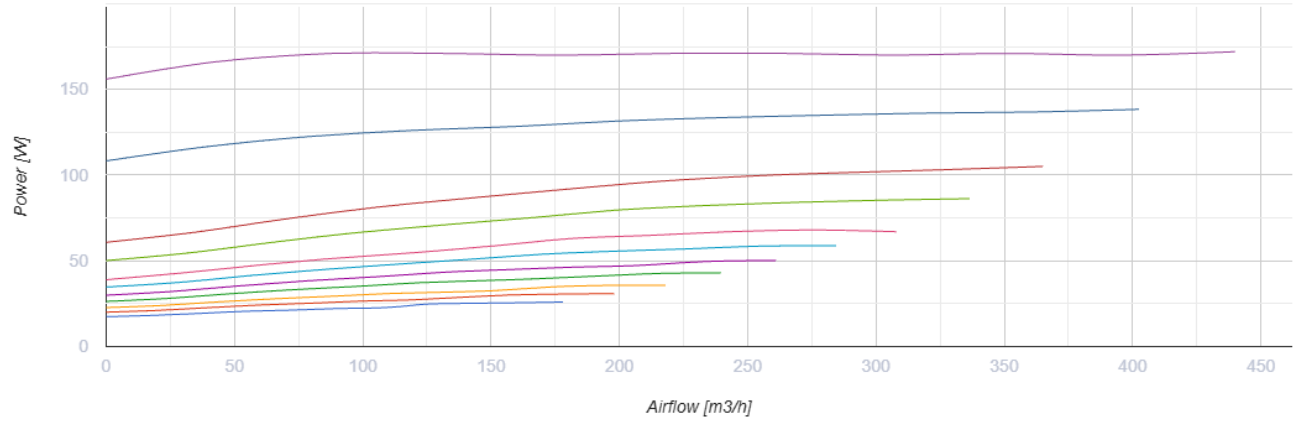


## Dimensions

| Ø D | Ø D1 | B | H | H1 | L |
|---|---|---|---|---|---|
| 160 | 100 | 528 | 675 | 755 | 747 |

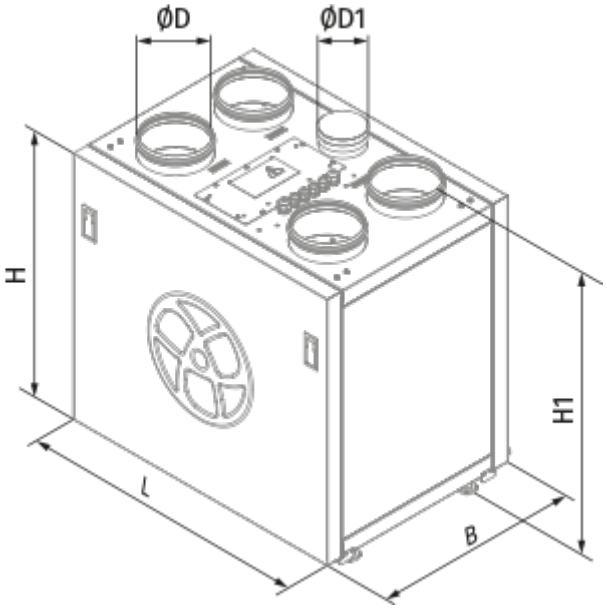
ØD
ØD1
H
H1
L
B

## Ecodesign

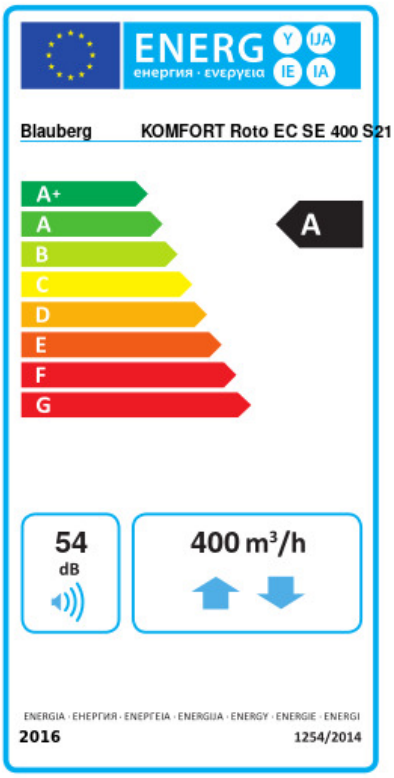


| Trademark | Blauberg | | | | | |
|---|---|---|---|---|---|---|
| Model | KOMFORT Roto EC SE 400 S21 | | | | | |
| Specific energy consumption (SEC) (kWh/(m²/a)) | Cold | | Average | | Warm | |
| | -84.9 | A+ | -41.8 | A | -17.1 | E |
| Type of ventilation unit | Bidirectional | | | | | |
| Type of drive installed | Variable speed | | | | | |
| Type of heat recovery system | Regenerative | | | | | |
| Thermal efficiency of heat recovery (%) | 81 | | | | | |
| Maximum flow rate (m³/h) | 400 | | | | | |
| Electric power input (W) | 170 | | | | | |
| Reference flow rate (m³/s) | 0.076 | | | | | |
| Reference pressure difference (Pa) | 50 | | | | | |
| Specific power input (SPI) (W/(m³/h)) | 0.247 | | | | | |
| Control typology | Local demand control | | | | | |
| Maximum internal leakage rates (%) | 2.7 | | | | | |
| Maximum external leakage rates (%) | 2.7 | | | | | |
| Declared typology | RVU BVU | | | | | |
| Sound power level (dB(A)) | 54 | | | | | |
| The annual electricity consumption (AEC) (kWh/a) | Cold | | Average | | Warm | |
| | 131 | | 523 | | 131 | |
| The annual heating saved (AHS) (kWh/a) | Cold | | Average | | Warm | |
| | 8817 | | 4507 | | 2038 | |

## Accessories

### For round ducts

| Name | Photo | Description |
|---|---|---|
| SD 160/600 |  | Silencers for round ducts |
| SD 160/900 |  | Silencers for round ducts |

| | | |
|---|---|---|
| SD 160/1200 |  | Silencers for round ducts |

### For round ducts

| Name | Photo | Description |
|---|---|---|
| VRV 160 |  | Backdraft dampers with spring for round ducts |

### For round ducts

| Name | Photo | Description |
|---|---|---|
| VKA 160 |  | Air dampers for round ducts |

### Cooker Hoods

| Name | Photo | Description |
|---|---|---|
| DAH 251-13 |  | Kitchen exhaust hood |

### Control Panels

| Name | Photo | Description |
|---|---|---|
| S25 |  | LCD control panel |
| S22 |  | Control panels |
| S22 Wi-Fi |  | Control panels |

### CO2 sensors

| Name | Photo | Description |
|---|---|---|
| CD-1 |  | CO2 sensors |

| | | |
|---|---|---|
| CD-2 |  | CO2 sensors |

### Humidity sensors

| Name | Photo | Description |
|---|---|---|
| FS2 |  | Humidity sensor |

### Other accessories

| Name | Photo | Description |
|---|---|---|
| FP 436x196x40 F7 |  | F7 panel filter |
| FP 436x196x40 G4 |  | G4 panel filter |