

KOMFORT Roto EC S6EK 200 S21

Air handling units with rotary heat exchanger

- Power of electrical reheater: 700
- Sound pressure level LpA at 3 m: 28
- Heat exchanger type: Rotary
- Heat exchanger material: Aluminum
- Supply filter: G4 + F7
- Extract filter: G4
- Sound-insulated casing
- Reheater: Electric
- BMS protocol: ModBus
- Control: Smartphone
- Casing material: Galvanized steel
- Humidity sensor: Optional
- CO2 sensor: Optional
- PM2.5 sensor: Optional

	Unit of measurement	KOMFORT Roto EC S6EK 200 S21
Connected air duct size	mm	125
Phases	-	1
Minimum supply voltage	V	230
Maximum supply voltage	V	230
Power supply frequency	Hz	50/60
Rated power	W	118
Power of electrical reheater	W	700
Unit current	A	4
Maximum airflow	m³/h	270
Rotation speed at 50hz	-	1800
Sound pressure level LpA at 3 m	dB(A)	28
Heat recovery efficiency, max	%	92
Heat exchanger type	-	Rotary
Heat exchanger material	-	Aluminum
Weight	kg	48
Supply filter	-	G4 + F7
Extract filter	-	G4
Transported air temperature (max)	°C	40
Transported air temperature (min)	°C	-25
Ambient air temperature max	°C	40
Ambient air temperature min	°C	1

Ingress protection rating	-	IP22
Ambient air humidity max	%	60
Ingress protection rating of the drive	-	IP44

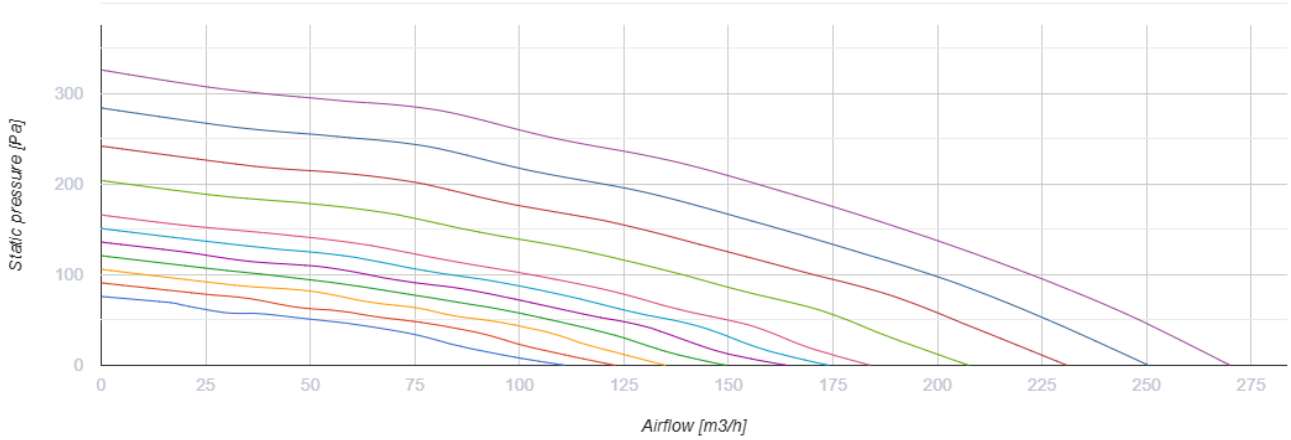

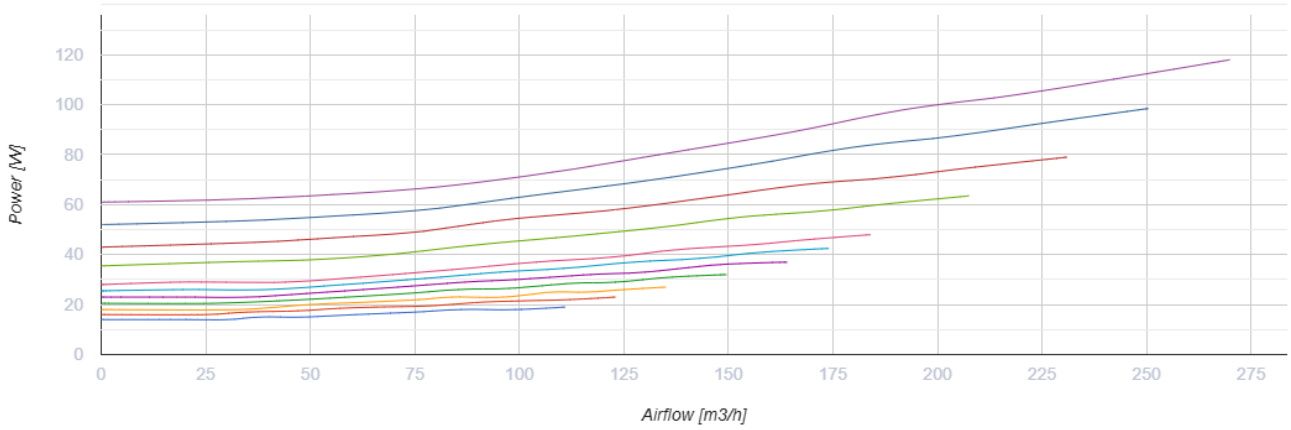

Dimensions

Ø D	B	B1	H	H1	L
125	348	371	791	865	598

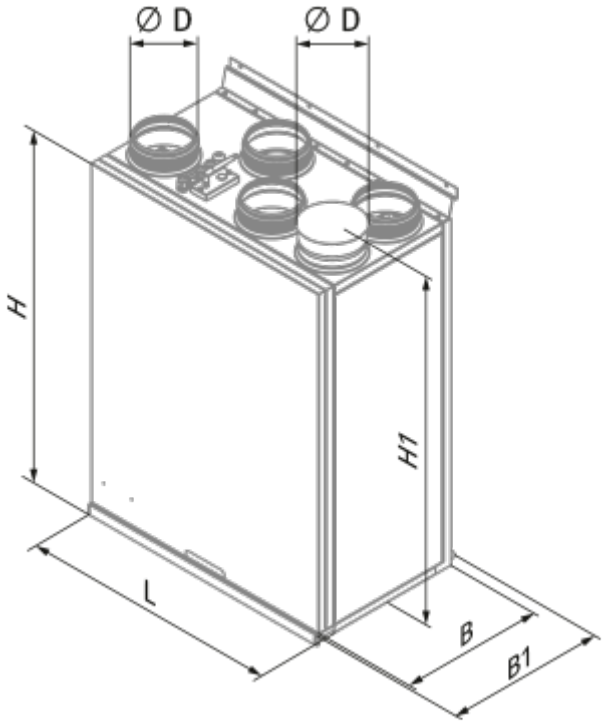

Accessories

For round ducts

Name	Photo	Description
SD 125/600		Silencers for round ducts
SD 125/900		Silencers for round ducts
SD 125/1200		Silencers for round ducts

For round ducts

Name	Photo	Description
VRV 125		Backdraft dampers with spring for round ducts

For round ducts

Name	Photo	Description

VKA 125		Air dampers for round ducts

Control Panels

Name	Photo	Description
S25		LCD control panel
S22		Control panels
S22 Wi-Fi		Control panels

CO2 sensors

Name	Photo	Description
CD-1		CO2 sensors
CD-2		CO2 sensors

Humidity sensors

Name	Photo	Description
FS2		Humidity sensor

Other accessories

Name	Photo	Description
FP 284x103x60 F7		F7 panel filter

FP 284x103x60 G4		G4 panel filter