

KOMFORT Roto EC S2E 200 S21

Heat recovery air handling units

- Power of electrical reheater: 700
- Sound pressure level LpA at 3 m: 28
- Heat exchanger type: Rotary
- Heat exchanger material: Aluminum
- Supply filter: G4 + F7
- Extract filter: G4
- Sound-insulated casing
- Reheater: Electric
- BMS protocol: ModBus
- Control: Smartphone
- Casing material: Coated steel
- Humidity sensor: Optional
- CO2 sensor: Optional
- PM2.5 sensor: Optional

	Unit of measurement	KOMFORT Roto EC S2E 200 S21
Connected air duct size	mm	125
Phases	-	1
Minimum supply voltage	V	230
Maximum supply voltage	V	230
Power supply frequency	Hz	50/60
Rated power	W	118
Power of electrical reheater	W	700
Unit current	A	4
Maximum airflow	m³/h	270
Sound pressure level LpA at 3 m	dB(A)	28
Heat recovery efficiency, max	%	92
Heat exchanger type	-	Rotary
Heat exchanger material	-	Aluminum
Weight	kg	48
Supply filter	-	G4 + F7
Extract filter	-	G4
Transported air temperature (max)	°C	40
Transported air temperature (min)	°C	-25
Ambient air temperature min	°C	1
Ambient air temperature max	°C	40
Ingress protection rating	-	IP22

Ambient air humidity max	%	80
Ingress protection rating of the drive	-	IP44

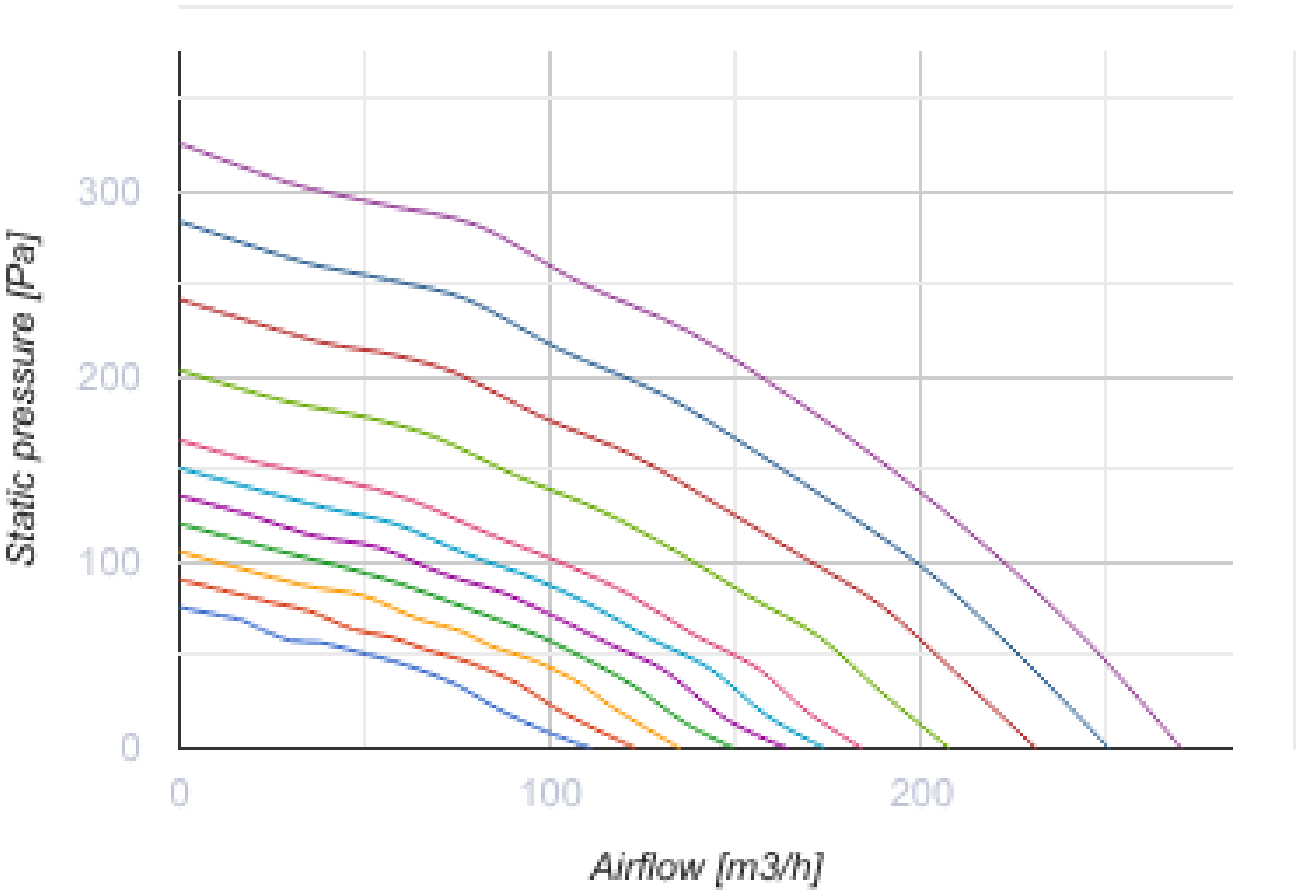

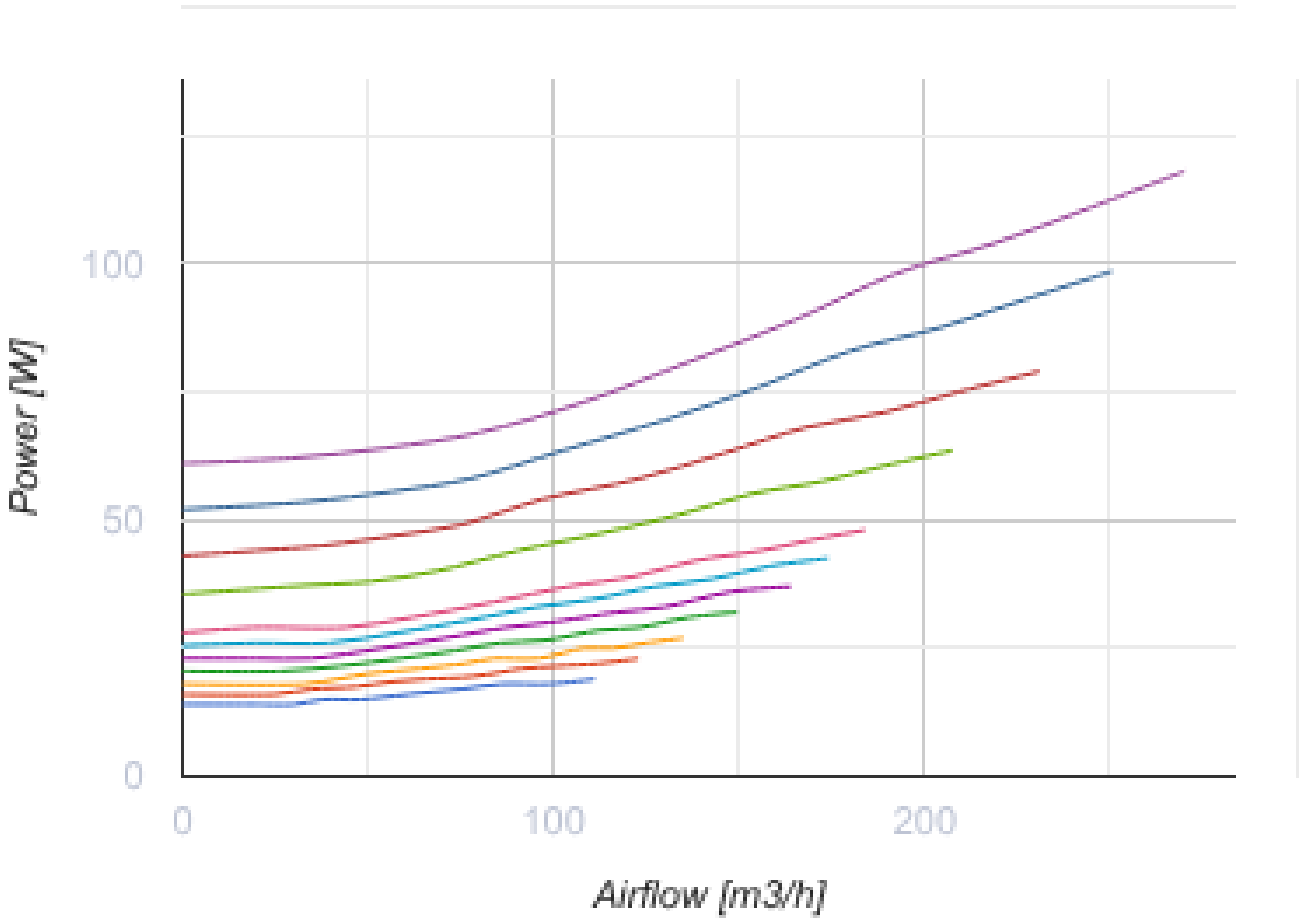

Dimensions

Ø D	Ø D1	B	B1	H	H1	H2	L	L1
125	125	347	510	700	901	135	598	600

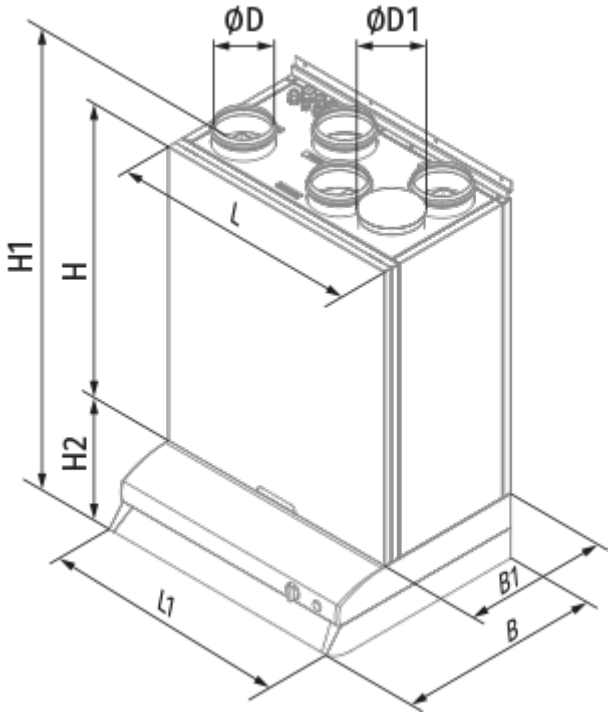
ØD
ØD1
H1
H
H2
L
L1
B1
B

Ecodesign

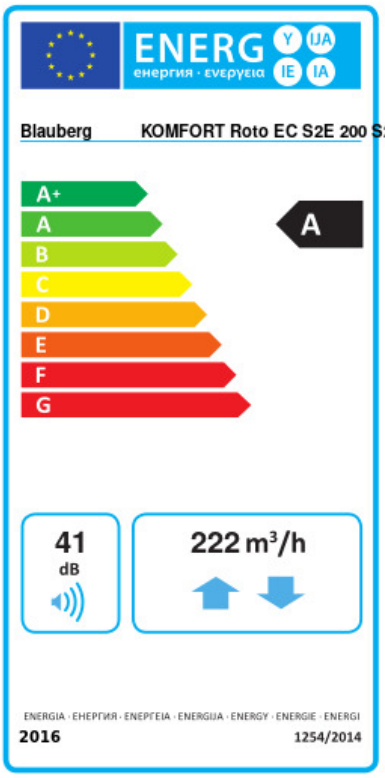

Trademark	Blauberg					
Model	KOMFORT Roto EC S2E 200 S21					
Specific energy consumption (SEC) (kWh/(m²/a))	Cold		Average		Warm	
	-84.3	A+	-41.2	A	-16.5	E
Type of ventilation unit	Bidirectional					
Type of drive installed	Variable speed					
Type of heat recovery system	Regenerative					
Thermal efficiency of heat recovery (%)	81					
Maximum flow rate (m³/h)	222					
Electric power input (W)	103					
Reference flow rate (m³/s)	0.041					
Reference pressure difference (Pa)	50					
Specific power input (SPI) (W/(m³/h))	0.293					
Control typology	Local demand control					
Maximum internal leakage rates (%)	2.7					
Maximum external leakage rates (%)	2.7					
Declared typology	RVU BVU					
Sound power level (dB(A))	41					
The annual electricity consumption (AEC) (kWh/a)	Cold		Average		Warm	
	155		619		155	
The annual heating saved (AHS) (kWh/a)	Cold		Average		Warm	
	8817		4507		2038	

Accessories

For round ducts

Name	Photo	Description
SD 125/600		Silencers for round ducts
SD 125/900		Silencers for round ducts

SD 125/1200		Silencers for round ducts

For round ducts

Name	Photo	Description
VRV 125		Backdraft dampers with spring for round ducts

For round ducts

Name	Photo	Description
VKA 125		Air dampers for round ducts

Cooker Hoods

Name	Photo	Description
DAH 251-13		Kitchen exhaust hood

Control Panels

Name	Photo	Description
S25		LCD control panel
S22		Control panels
S22 Wi-Fi		Control panels

CO2 sensors

Name	Photo	Description
CD-1		CO2 sensors

CD-2		CO2 sensors

Humidity sensors

Name	Photo	Description
FS2		Humidity sensor

Other accessories

Name	Photo	Description
FP 284x103x60 F7		F7 panel filter
FP 284x103x60 G4		G4 panel filter