

KOMFORT LE 600-4

Heat recovery air handling units

- Power of electrical reheater: 4000
- Sound pressure level LpA at 3 m: 48
- Heat exchanger type: Cross flow
- Heat exchanger material: Polystyrene
- Supply filter: G4
- Extract filter: G4
- Sound-insulated casing
- Reheater: Electric
- Control: Wired control panel
- Casing material: Galvanized steel

	Unit of measurement	KOMFORT LE 600-4
Connected air duct size	mm	249
Phases	-	1
Minimum supply voltage	V	230
Maximum supply voltage	V	230
Power supply frequency	Hz	50/60
Rated power	W	390
Power of electrical reheater	W	4000
Unit current	A	19.1
Maximum airflow	m^3/h	600
Rotation speed at 50hz	-	1350
Sound pressure level LpA at 3 m	dB(A)	48
Heat recovery efficiency, max	%	85
Heat exchanger type	-	Cross flow
Heat exchanger material	-	Polystyrene
Weight	kg	54
Supply filter	-	G4
Extract filter	-	G4
Transported air temperature (max)	°C	40
Transported air temperature (min)	°C	-25
Ambient air temperature min	°C	1
Ambient air temperature max	°C	40

Ingress protection rating	-	IP22
Ambient air humidity max	%	80
Ingress protection rating of the drive	-	IP44

Dimensions

ØD	B	B1	H	H1	L	L1	L2
199	497	403	554	–	954	996	1057

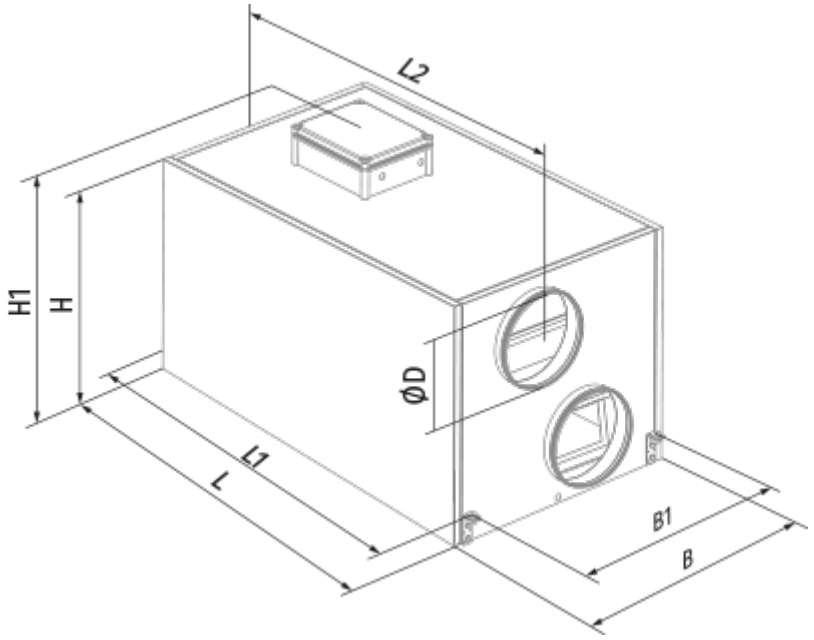

Ecodesign

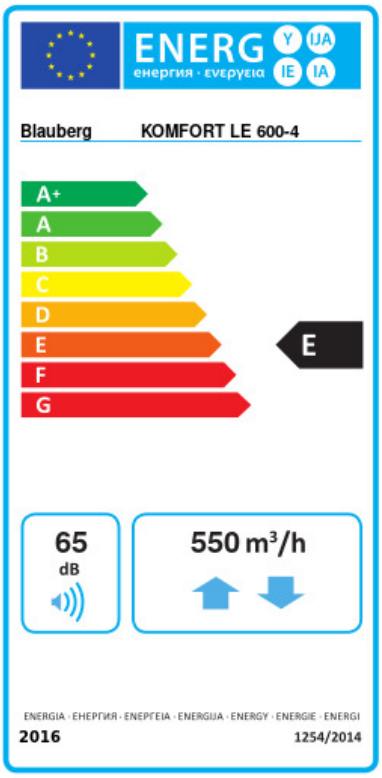

Trademark	Blauberg					
Model	KOMFORT LE 600-4					
Specific energy consumption (SEC) (kWh/(m²/a))	Cold		Average		Warm	
	-46.5	A+	-15.9	E	4.2	G
Type of ventilation unit	Bidirectional					
Type of drive installed	Multi-speed					
Type of heat recovery system	Recuperative					
Thermal efficiency of heat recovery (%)	64					
Maximum flow rate (m³/h)	550					
Electric power input (W)	395					
Reference flow rate (m³/s)	0.107					
Reference pressure difference (Pa)	50					
Specific power input (SPI) (W/(m³/h))	0.675					
Control typology	Manual control					
Maximum internal leakage rates (%)	2.7					
Maximum external leakage rates (%)	2.7					
Declared typology	RVU BVU					
Sound power level (dB(A))	65					
The annual electricity consumption (AEC) (kWh/a)	Cold		Average		Warm	
	1428		891		846	
The annual heating saved (AHS) (kWh/a)	Cold		Average		Warm	
	7343		3754		1697	

Accessories

For round ducts

Name	Photo	Description
SD 200/600		Silencers for round ducts
SD 200/900		Silencers for round ducts

SD 200/1200		Silencers for round ducts
SDF 200/600		Flexible silencers for round ducts
SDF 200/900		Flexible silencers for round ducts
SDF 200/2000		Flexible silencers for round ducts

For round ducts

Name	Photo	Description
VRV 200		Backdraft dampers with spring for round ducts

Other accessories

Name	Photo	Description
FP 438x215x48 G4		G4 panel filter