

KOMFORT LE 2200-18

Heat recovery air handling units

- Power of electrical reheater: 18000
- Sound pressure level LpA at 3 m: 65
- Heat exchanger type: Cross flow
- Heat exchanger material: Polystyrene
- Supply filter: G4
- Extract filter: G4
- Sound-insulated casing
- Reheater: Electric
- Control: Wired control panel
- Casing material: Galvanized steel

	Unit of measurement	KOMFORT LE 2200-18
Connected air duct size	mm	315
Phases	-	3
Minimum supply voltage	V	230
Maximum supply voltage	V	230
Power supply frequency	Hz	50/60
Rated power	W	1300
Power of electrical reheater	W	18000
Unit current	A	31.7
Maximum airflow	m^3/h	2200
Rotation speed at 50hz	-	1150
Sound pressure level LpA at 3 m	dB(A)	65
Heat recovery efficiency, max	%	77
Heat exchanger type	-	Cross flow
Heat exchanger material	-	Polystyrene
Weight	kg	96
Supply filter	-	G4
Extract filter	-	G4
Transported air temperature (max)	°C	40
Transported air temperature (min)	°C	-25
Ambient air temperature min	°C	1
Ambient air temperature max	°C	40

Ingress protection rating	-	IP22
Ambient air humidity max	%	80
Ingress protection rating of the drive	-	IP44

Dimensions

ØD	B	B1	H	H1	L	L1	L2
314	842	581	814	947	1345	1394	1447

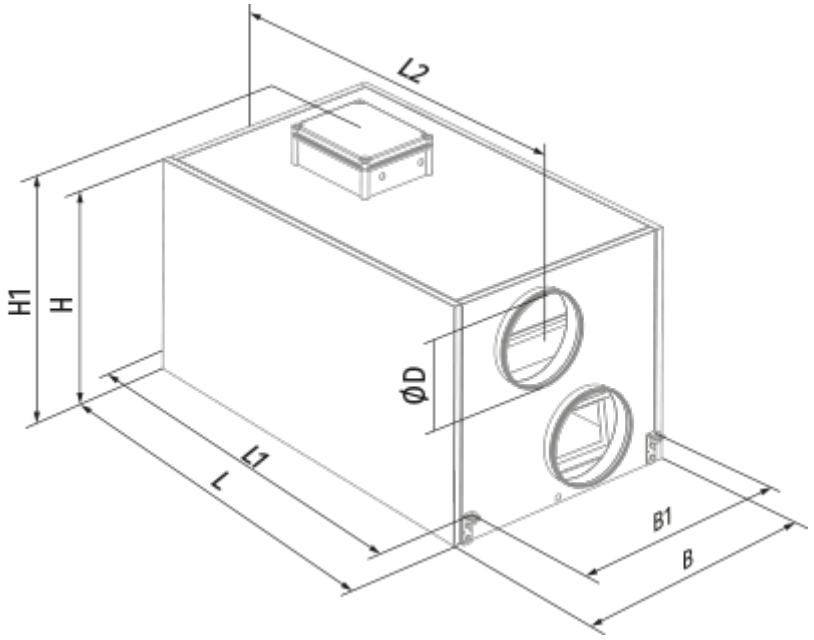

Accessories

For round ducts

Name	Photo	Description
SD 315/600		Silencers for round ducts
SD 315/900		Silencers for round ducts
SD 315/1200		Silencers for round ducts
SDF 315/600	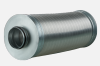	Flexible silencers for round ducts

SDF 315/900		Flexible silencers for round ducts
SDF 315/2000		Flexible silencers for round ducts

For round ducts

Name	Photo	Description
VRV 315		Backdraft dampers with spring for round ducts

Other accessories

Name	Photo	Description
FP 780x273x48 G4		G4 panel filter