

# KOMFORT L 600

Heat recovery air handling units

- Sound pressure level LpA at 3 m: 32–48
- Heat exchanger type: Cross flow
- Heat exchanger material: Polystyrene
- Supply filter: G4
- Extract filter: G4
- Sound-insulated casing
- Control: Speed switch
- Casing material: Aluzinc steel

| | Unit of measurement | KOMFORT L 600 |
|---|---|---|
| Connected air duct size | mm | 200 |
| Phases | - | 1 |
| Maximum supply voltage | V | 230 |
| Minimum supply voltage | V | 230 |
| Power supply frequency | Hz | 50/60 |
| Rated power | W | 390 |
| Unit current | A | 1.72 |
| Maximum airflow | $m^3/h$ | 600 |
| Rotation speed at 50hz | - | 1350 |
| Sound pressure level LpA at 3 m | dB(A) | 32–48 |
| Heat recovery efficiency, max | % | 85 |
| Heat exchanger type | - | Cross flow |
| Heat exchanger material | - | Polystyrene |
| Weight | kg | 54 |
| Supply filter | - | G4 |
| Extract filter | - | G4 |
| Transported air temperature (max) | °C | 40 |
| Transported air temperature (min) | °C | -25 |
| Ambient air temperature min | °C | 1 |
| Ambient air temperature max | °C | 50 |
| Ingress protection rating | - | IP22 |

| | | |
|---|---|---|
| Ambient air humidity max | % | 80 |
| Ingress protection rating of the drive | - | IP44 |

## Dimensions

| ØD | B | H | L | L1 |
|---|---|---|---|---|
| 199 | 416 | 603 | 722 | 768 |

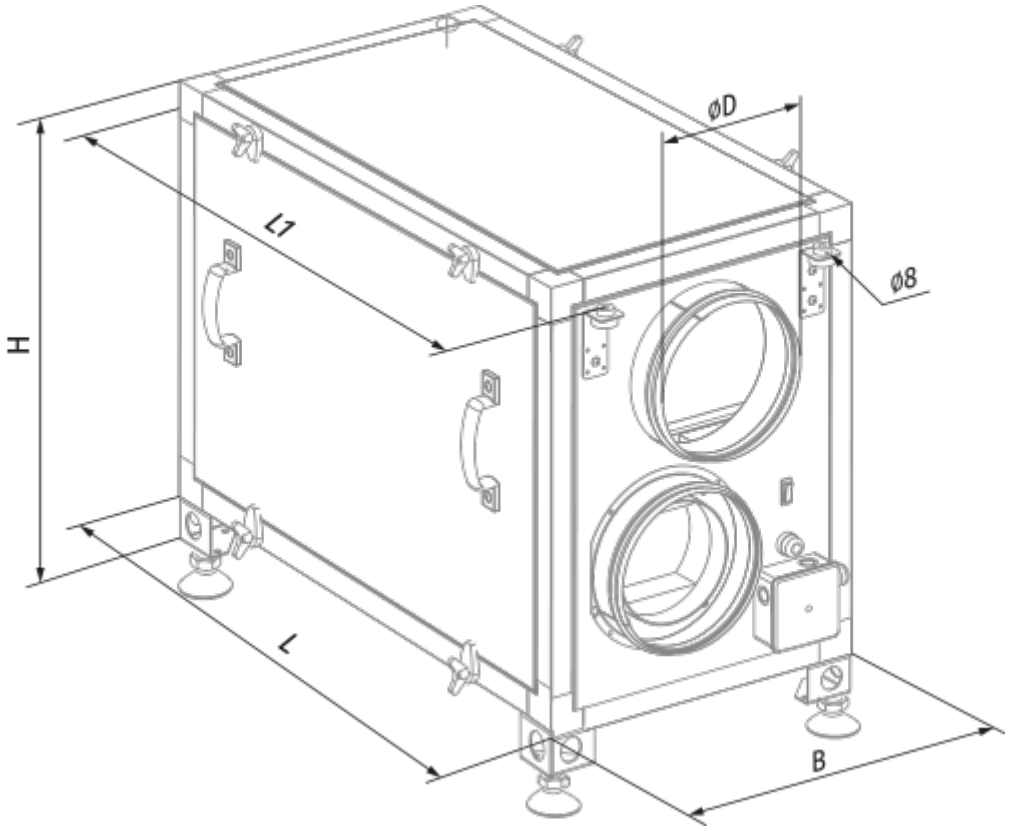

## Ecodesign

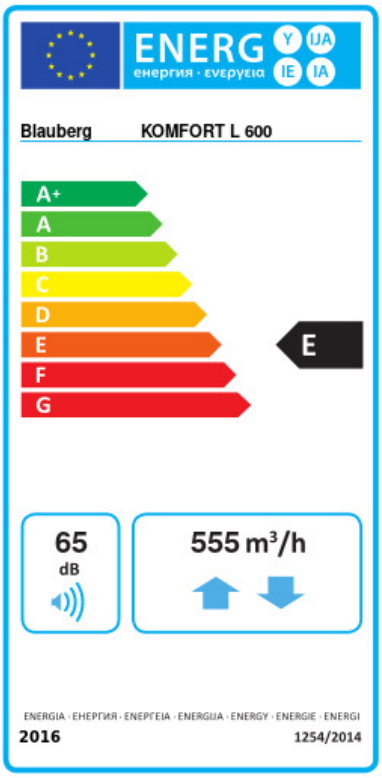


| Trademark | Blauberg | | | | | |
|---|---|---|---|---|---|---|
| Model | KOMFORT L 600 | | | | | |
| Specific energy consumption (SEC) (kWh/(m²/a)) | Cold | | Average | | Warm | |
| | -46.5 | A+ | -15.9 | E | 4.2 | G |
| Type of ventilation unit | Bidirectional | | | | | |
| Type of drive installed | Multi-speed | | | | | |
| Type of heat recovery system | Recuperative | | | | | |
| Thermal efficiency of heat recovery (%) | 64 | | | | | |
| Maximum flow rate (m³/h) | 555 | | | | | |
| Electric power input (W) | 390 | | | | | |
| Reference flow rate (m³/s) | 0.108 | | | | | |
| Reference pressure difference (Pa) | 50 | | | | | |
| Specific power input (SPI) (W/(m³/h)) | 0.618 | | | | | |
| Control typology | Manual control | | | | | |
| Maximum internal leakage rates (%) | 2.7 | | | | | |
| Maximum external leakage rates (%) | 2.7 | | | | | |
| Declared typology | RVU BVU | | | | | |
| Sound power level (dB(A)) | 65 | | | | | |
| The annual electricity consumption (AEC) (kWh/a) | Cold | | Average | | Warm | |
| | 1428 | | 891 | | 846 | |
| The annual heating saved (AHS) (kWh/a) | Cold | | Average | | Warm | |
| | 7343 | | 3754 | | 1697 | |

## Accessories

### For round ducts

| Name | Photo | Description |
|---|---|---|
| SD 200/600 |  | Silencers for round ducts |
| SD 200/900 |  | Silencers for round ducts |

| | | |
|---|---|---|
| SD 200/1200 |  | Silencers for round ducts |

### For round ducts

| Name | Photo | Description |
|---|---|---|
| VRV 200 |  | Backdraft dampers with spring for round ducts |

### Other accessories

| Name | Photo | Description |
|---|---|---|
| FP 436x215x48 G4 |  | G4 panel filter |