

KOMFORT L 2200

Heat recovery air handling units

- Sound pressure level LpA at 3 m: 65
- Heat exchanger type: Cross flow
- Heat exchanger material: Polystyrene
- Supply filter: G4
- Extract filter: G4
- Sound-insulated casing
- Control: Speed switch
- Casing material: Galvanized steel

	Unit of measurement	KOMFORT L 2200
Connected air duct size	mm	314
Phases	-	1
Minimum supply voltage	V	230
Maximum supply voltage	V	230
Power supply frequency	Hz	50/60
Rated power	W	1300
Unit current	A	5.68
Maximum airflow	m³/h	2200
Rotation speed at 50hz	-	1150
Sound pressure level LpA at 3 m	dB(A)	65
Heat recovery efficiency, max	%	87
Heat exchanger type	-	Cross flow
Heat exchanger material	-	Polystyrene
Weight	kg	96
Supply filter	-	G4
Extract filter	-	G4
Transported air temperature (max)	°C	40
Transported air temperature (min)	°C	-25
Ambient air temperature max	°C	50
Ambient air temperature min	°C	10
Ingress protection rating	-	IP22

Ambient air humidity max	%	80
Ingress protection rating of the drive	-	IP44

Dimensions

ØD	B	H	L	L1
313	846	968	1000	1050

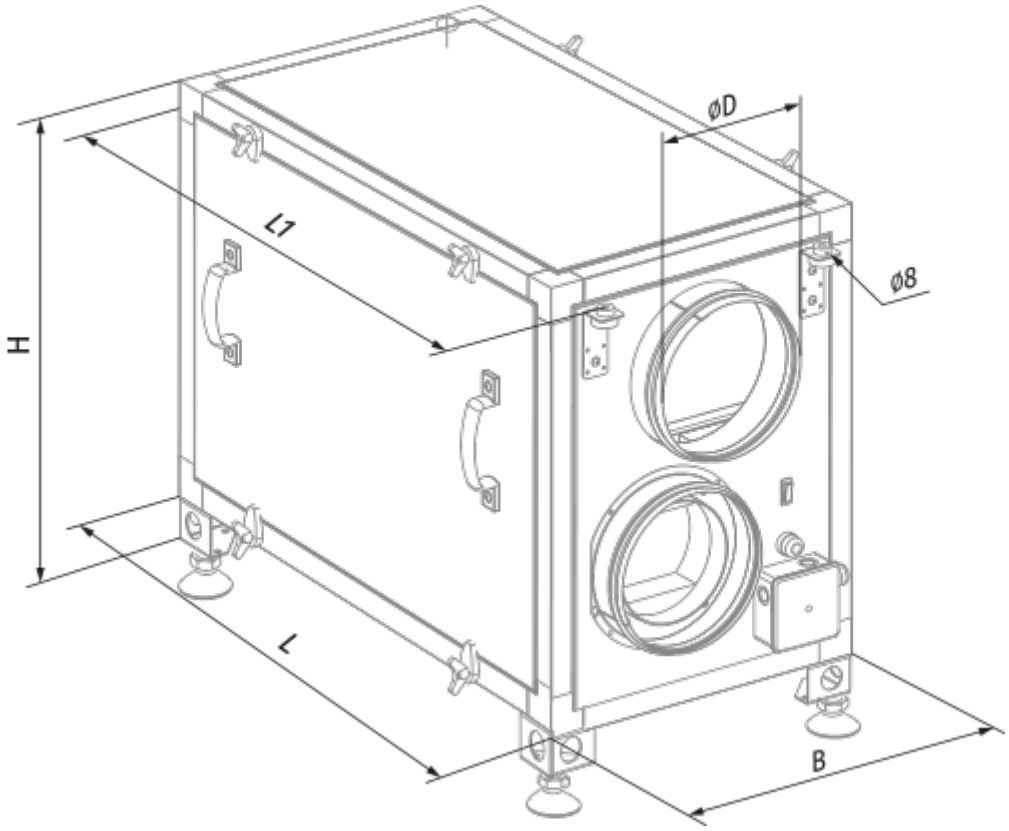

Accessories

For round ducts

Name	Photo	Description
SD 315/600		Silencers for round ducts
SD 315/900		Silencers for round ducts

SD 315/1200		Silencers for round ducts

For round ducts

Name	Photo	Description
VRV 315		Backdraft dampers with spring for round ducts

Other accessories

Name	Photo	Description
FP 750x295x48 G4		G4 panel filter