

KOMFORT EC S5B 270 S14

Heat and energy recovery air handling units

- Sound pressure level LpA at 3 m: 34
- Heat exchanger type: Counter flow
- Heat exchanger material: Polystyrene
- Supply filter: G4 (option: F8)
- Extract filter: G4
- Sound-insulated casing
- Bypass: Manual
- Control: Wired control panel
- Casing material: EPP
- Humidity sensor: Optional
- CO2 sensor: Optional

	Unit of measurement	KOMFORT EC S5B 270 S14
Connected air duct size	mm	125
Phases	-	1
Minimum supply voltage	V	230
Maximum supply voltage	V	230
Power supply frequency	Hz	50/60
Rated power	W	162
Unit current	A	1.2
Maximum airflow	m³/h	300
Rotation speed at 50hz	-	3200
Sound pressure level LpA at 3 m	dB(A)	34
Heat recovery efficiency, max	%	98
Heat exchanger type	-	Counter flow
Heat exchanger material	-	Polystyrene
Weight	kg	13
Supply filter	-	G4 (option: F8)
Extract filter	-	G4
Transported air temperature (max)	°C	40
Transported air temperature (min)	°C	-25
Ambient air temperature min	°C	1
Ambient air temperature max	°C	40
Ingress protection rating	-	IP22

Ambient air humidity max	%	60
Ingress protection rating of the drive	-	IP44

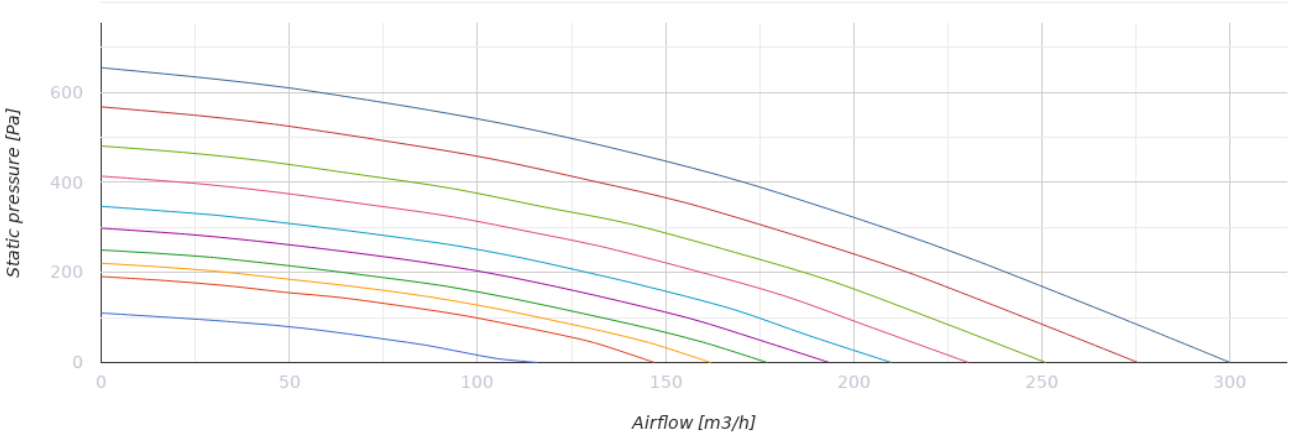

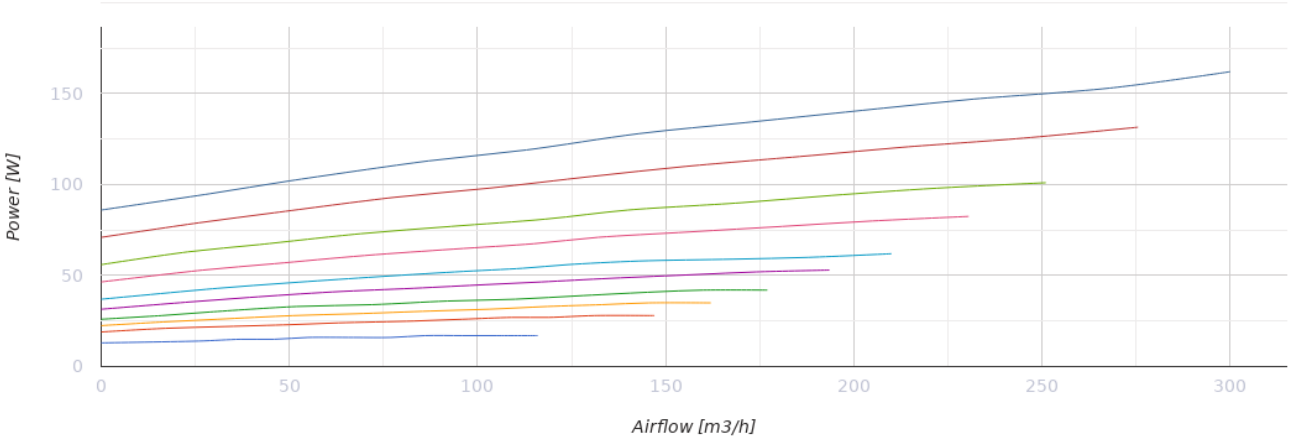

Dimensions

ØD	B	H	H1	L
125	590	852	893	316

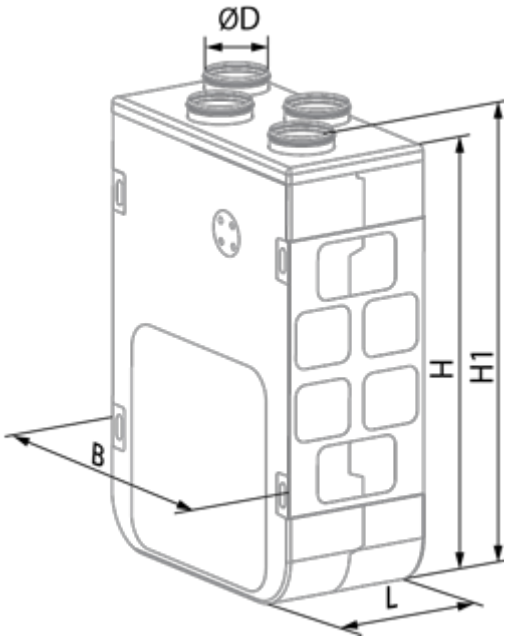
ØD
H
H1
B
L

Ecodesign

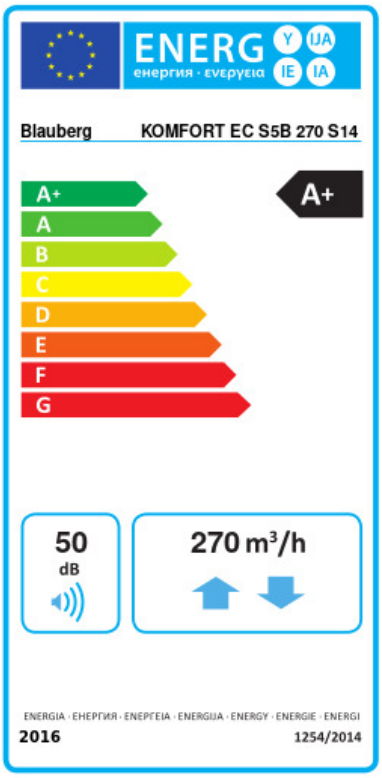

Trademark	Blauberg					
Model	KOMFORT EC S5B 270 S14					
Specific energy consumption (SEC) (kWh/(m²/a))	Cold		Average		Warm	
	81.8	A+	42.3	A+	17	E
Type of ventilation unit	Bidirectional					
Type of drive installed	Variable speed					
Type of heat recovery system	Recuperative					
Thermal efficiency of heat recovery (%)	90					
Maximum flow rate (m³/h)	270					
Electric power input (W)	153					
Reference flow rate (m³/s)	0.053					
Reference pressure difference (Pa)	50					
Specific power input (SPI) (W/(m³/h))	0.316					
Control typology	Local demand control					
Maximum internal leakage rates (%)	2.7					
Maximum external leakage rates (%)	2.7					
Declared typology	RVU BVU					
Sound power level (dB(A))	50					
The annual electricity consumption (AEC) (kWh/a)	Cold		Average		Warm	
	749		212		167	
The annual heating saved (AHS) (kWh/a)	Cold		Average		Warm	
	9181		4693		2122	

Accessories

Condensation drainage

Name	Photo	Description
SFK 20x32		Hydraulic syphon for condensate drainage

For round ducts

Name	Photo	Description

VKA 125		Air dampers for round ducts

CO2 sensors

Name	Photo	Description
CD-1		CO2 sensors
CD-2		CO2 sensors

Humidity sensors

Name	Photo	Description
FS2		Humidity sensor

Other accessories

Name	Photo	Description
FP 264x182x18 G4		G4 panel filter