

KOMFORT EC LBE 700-E S21

Heat recovery air handling units

- Power of electrical reheater: 3600
- Sound pressure level LpA at 3 m: 31
- Heat exchanger type: Counter flow
- Heat exchanger material: Enthalpy
- Supply filter: G4 + F7
- Extract filter: G4
- Sound-insulated casing
- Enthalpy heat exchanger
- Bypass: Auto
- Reheater: Electric
- Preheater: Optional
- BMS protocol: ModBus
- Control: Smartphone
- Casing material: Aluzinc
- Humidity sensor: Optional
- CO2 sensor: Optional
- PM2.5 sensor: Optional

	Unit of measurement	KOMFORT EC LBE 700-E S21
Connected air duct size	mm	250
Phases	-	1
Maximum supply voltage	V	230
Minimum supply voltage	V	230
Power supply frequency	Hz	50/60
Rated power	W	336
Power of electrical reheater	W	3600
Unit current	A	18
Maximum airflow	m³/h	830
Rotation speed at 50hz	-	3200
Sound pressure level LpA at 3 m	dB(A)	31
Heat recovery efficiency, max	%	89
Heat exchanger type	-	Counter flow
Heat exchanger material	-	Enthalpy
Weight	kg	108.4
Supply filter	-	G4 + F7
Extract filter	-	G4
Transported air temperature (max)	°C	40
Transported air temperature (min)	°C	-25

Ambient air temperature min	°C	1
Ambient air temperature max	°C	40
Ingress protection rating	-	IP22
Ambient air humidity max	%	60
Ingress protection rating of the drive	-	IP44

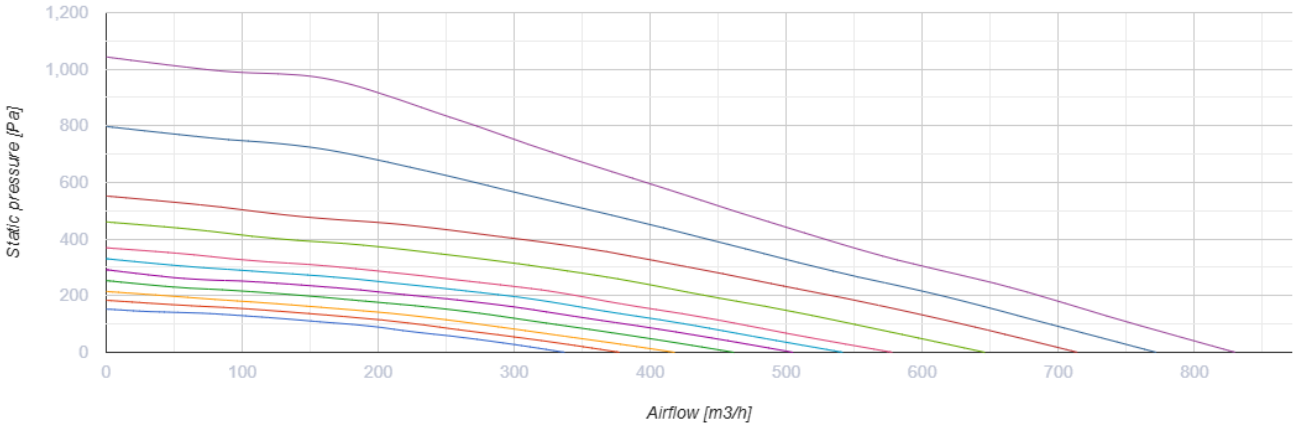

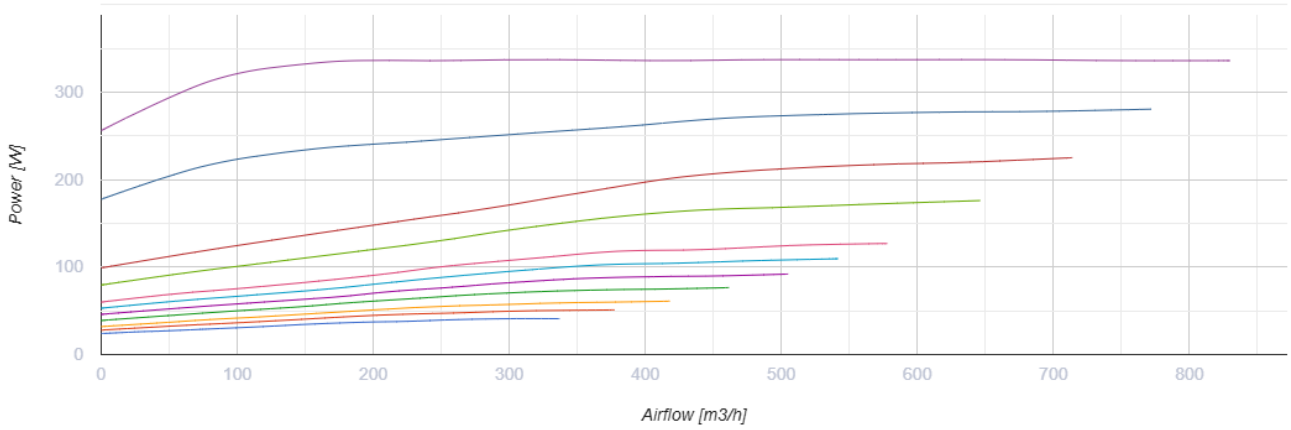

Dimensions

Ø D	B	B1	H	L	L1
247	866	700	601	1282	1379

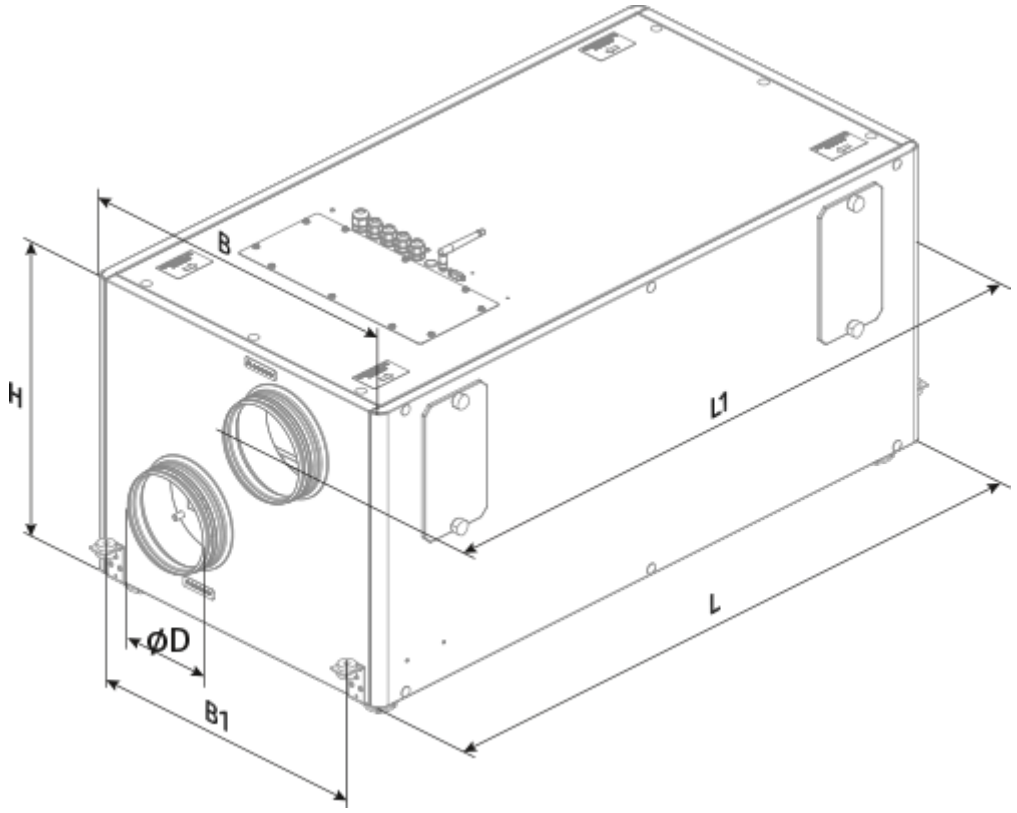
B
H
L1
L
ØD
B1

Ecodesign

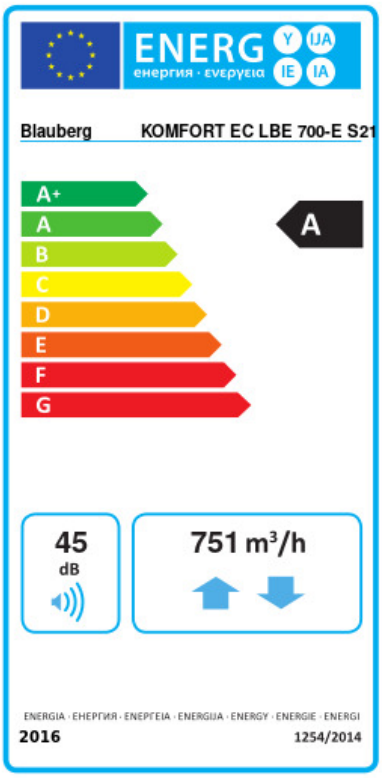

Trademark	Blauberg					
Model	KOMFORT EC LBE 700-E S21					
Specific energy consumption (SEC) (kWh/(m²/a))	Cold		Average		Warm	
	-77.9	A+	-40.8	A	-16.9	E
Type of ventilation unit	Bidirectional					
Type of drive installed	Variable speed					
Type of heat recovery system	Recuperative					
Thermal efficiency of heat recovery (%)	78					
Maximum flow rate (m³/h)	751					
Electric power input (W)	336					
Reference flow rate (m³/s)	0.143					
Reference pressure difference (Pa)	50					
Specific power input (SPI) (W/(m³/h))	0.243					
Control typology	Local demand control					
Maximum internal leakage rates (%)	2.7					
Maximum external leakage rates (%)	2.7					
Declared typology	RVU BVU					
Sound power level (dB(A))	45					
The annual electricity consumption (AEC) (kWh/a)	Cold		Average		Warm	
	710		173		128	
The annual heating saved (AHS) (kWh/a)	Cold		Average		Warm	
	8695		4445		2010	

Accessories

For round ducts

Name	Photo	Description
SD 250/600		Silencers for round ducts
SD 250/900		Silencers for round ducts

SD 250/1200		Silencers for round ducts

For round ducts

Name	Photo	Description
VRV 250		Backdraft dampers with spring for round ducts

For round ducts

Name	Photo	Description
VKA 250		Air dampers for round ducts

Heaters

Name	Photo	Description
EVH 250-1.2-1 S21 V.2		Electric duct preheater for heat exchanger freeze protection
EVH 250-2.0-1 S21 V.2		Electric duct preheater for heat exchanger freeze protection
EVH 250-3.0-1 S21 V.2		Electric duct preheater for heat exchanger freeze protection

Condensation drainage

Name	Photo	Description
CP-2		Drain pump

Control Panels

Name	Photo	Description
S25		LCD control panel
S22		Control panels

S22 Wi-Fi		Control panels

CO2 sensors

Name	Photo	Description
CD-1		CO2 sensors
CD-2		CO2 sensors

Humidity sensors

Name	Photo	Description
FS2		Humidity sensor

Other accessories

Name	Photo	Description
FP 784x253x48 F7		F7 panel filter
FP 784x253x48 G4		G4 panel filter

Electric actuators

Name	Photo	Description
Belimo TF230		Electric actuators