

# KOMFORT EC DBW 900 R S21 DTV

Suspended heat recovery air handling units

- Sound pressure level LpA at 3 m: 33
- Heat exchanger type: Counter flow
- Heat exchanger material: Polystyrene
- Supply filter: G4 (F7 option)
- Extract filter: G4
- Sound-insulated casing
- Bypass: Auto
- Reheater: Water
- Preheater: Optional
- BMS protocol: ModBus
- Control: Smartphone
- Casing material: Aluzinc
- Humidity sensor: Optional
- CO2 sensor: Optional
- PM2.5 sensor: Optional

| | Unit of measurement | KOMFORT EC DBW 900 R S21 DTV |
|---|---|---|
| Connected air duct size | mm | 250 |
| Phases | - | 1 |
| Minimum supply voltage | V | 230 |
| Maximum supply voltage | V | 230 |
| Power supply frequency | Hz | 50/60 |
| Rated power | W | 442 |
| Unit current | A | 3 |
| Maximum airflow | m³/h | 1030 |
| Rotation speed at 50hz | - | 2720 |
| Sound pressure level LpA at 3 m | dB(A) | 33 |
| Heat recovery efficiency, max | % | 88 |
| Heat exchanger type | - | Counter flow |
| Heat exchanger material | - | Polystyrene |
| Weight | kg | 112 |
| Supply filter | - | G4 (F7 option) |
| Extract filter | - | G4 |
| Transported air temperature (max) | °C | 40 |
| Transported air temperature (min) | °C | -25 |
| Ambient air temperature min | °C | 1 |

| | | |
|---|---|---|
| Ambient air temperature max | °C | 40 |
| Ingress protection rating | - | IP22 |
| Ambient air humidity max | % | 60 |
| Ingress protection rating of the drive | - | IP44 |

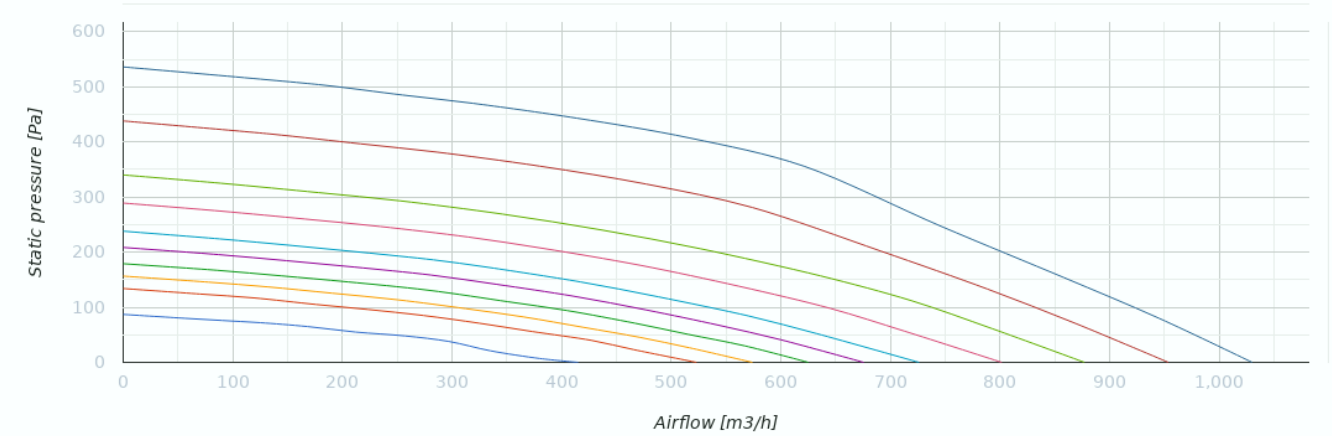


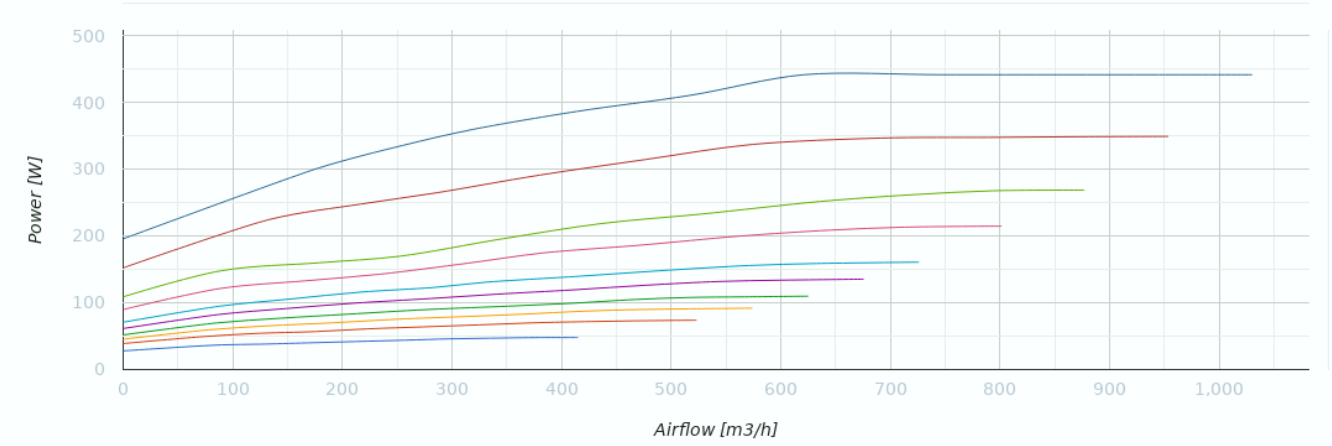


## Dimensions

| Ø D | B | B1 | H | L | L1 |
|---|---|---|---|---|---|
| 249 | 1350 | 1485 | 317 | 1346 | 1395 |

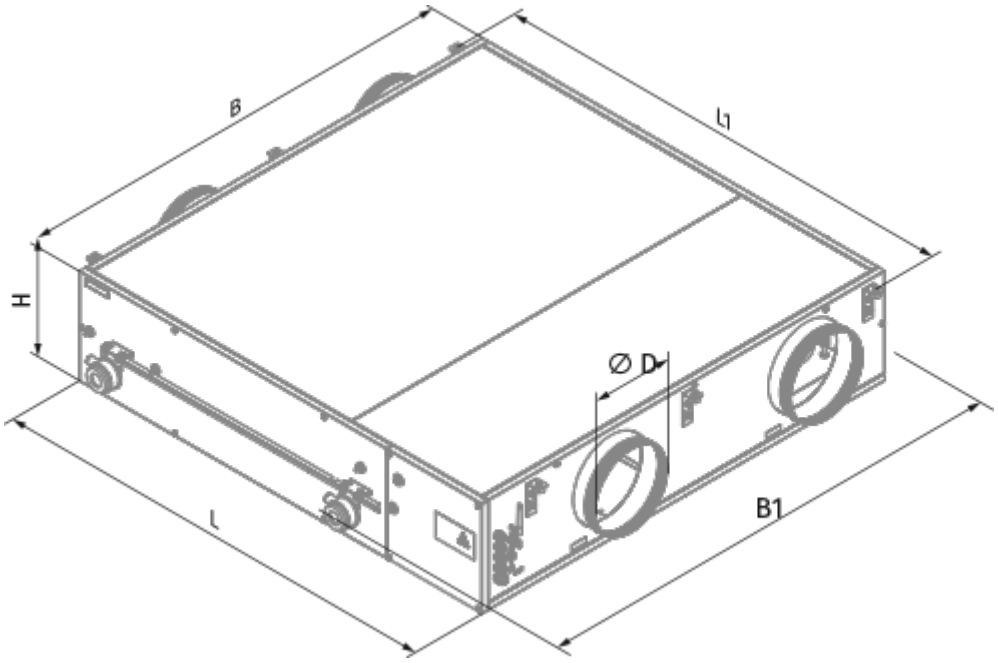
B
L1
H
∅ D
L
B1

## Ecodesign

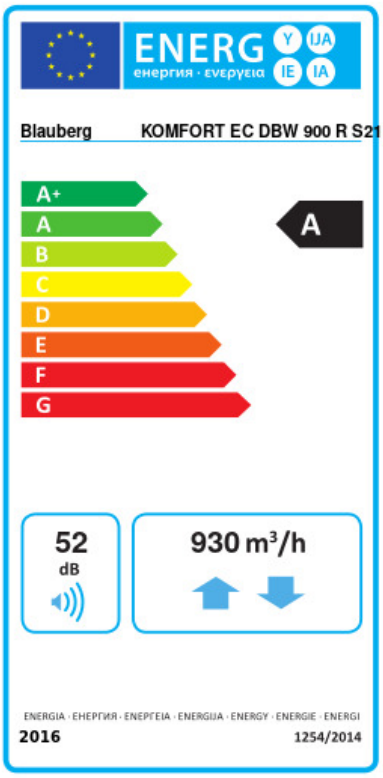


| Trademark | Blauberg | | | | | |
|---|---|---|---|---|---|---|
| Model | KOMFORT EC DBW 900 R S21 DTV | | | | | |
| Specific energy consumption (SEC) (kWh/(m²/a)) | Cold | | Average | | Warm | |
| | -78.1 | A+ | -40.8 | A | -16.7 | E |
| Type of ventilation unit | Bidirectional | | | | | |
| Type of drive installed | Variable speed | | | | | |
| Type of heat recovery system | Recuperative | | | | | |
| Thermal efficiency of heat recovery (%) | 79 | | | | | |
| Maximum flow rate (m³/h) | 930 | | | | | |
| Electric power input (W) | 442 | | | | | |
| Reference flow rate (m³/s) | 0.169 | | | | | |
| Reference pressure difference (Pa) | 50 | | | | | |
| Specific power input (SPI) (W/(m³/h)) | 0.261 | | | | | |
| Control typology | Local demand control | | | | | |
| Maximum internal leakage rates (%) | 2.7 | | | | | |
| Maximum external leakage rates (%) | 2.7 | | | | | |
| Declared typology | RVU BVU | | | | | |
| Sound power level (dB(A)) | 52 | | | | | |
| The annual electricity consumption (AEC) (kWh/a) | Cold | | Average | | Warm | |
| | 720 | | 183 | | 138 | |
| The annual heating saved (AHS) (kWh/a) | Cold | | Average | | Warm | |
| | 8736 | | 4466 | | 2019 | |

## Accessories

### Condensation drainage

| Name | Photo | Description |
|---|---|---|
| SFK 20x32 |  | Hydraulic syphon for condensate drainage |

### For round ducts

| Name | Photo | Description |
|---|---|---|

| | | |
|---|---|---|
| SD 250/600 |  | Silencers for round ducts |
| SD 250/900 |  | Silencers for round ducts |
| SD 250/1200 |  | Silencers for round ducts |

### For round ducts

| Name | Photo | Description |
|---|---|---|
| VRV 250 |  | Backdraft dampers with spring for round ducts |

### For round ducts

| Name | Photo | Description |
|---|---|---|
| VKA 250 |  | Air dampers for round ducts |

### Heaters

| Name | Photo | Description |
|---|---|---|
| EVH 250-1.2-1 S21 V.2 |  | Electric duct preheater for heat exchanger freeze protection |
| EVH 250-2.0-1 S21 V.2 |  | Electric duct preheater for heat exchanger freeze protection |
| EVH 250-3.0-1 S21 V.2 |  | Electric duct preheater for heat exchanger freeze protection |

### Mixing chambers

| Name | Photo | Description |
|---|---|---|
| WMG 3/4-4 |  | Water mixing units |
| WMG 3/4-6 |  | Water mixing units |

| | | |
|---|---|---|
| WMG 1-6 |  | Water mixing units |
| WMG 1-10 |  | Water mixing units |
| WMG 1 1/4-10 |  | Water mixing units |
| WMG 1 1/4-16 |  | Water mixing units |
| WMG 1 1/2-16 |  | Water mixing units |
| WMG 1 1/2-25 |  | Water mixing units |
| WMG 2-25 |  | Water mixing units |
| WMG 2-40 |  | Water mixing units |

### Control Panels

| Name | Photo | Description |
|---|---|---|
| S25 |  | LCD control panel |
| S22 |  | Control panels |
| S22 Wi-Fi |  | Control panels |

### CO2 sensors

| Name | Photo | Description |
|---|---|---|
| CD-1 |  | CO2 sensors |

| | | |
|---|---|---|
| CD-2 |  | CO2 sensors |

### Humidity sensors

| Name | Photo | Description |
|---|---|---|
| FS2 |  | Humidity sensor |

### Other accessories

| Name | Photo | Description |
|---|---|---|
| FP 647x274x20 G4 |  | G4 panel filter |

### Electric actuators

| Name | Photo | Description |
|---|---|---|
| Belimo TF230 |  | Electric actuators |