


# KIT Aero-BW 100/40-1

Heat movers

| | Unit of measurement | KIT Aero-BW 100/40-1 |
|---|---|---|

## Dimensions

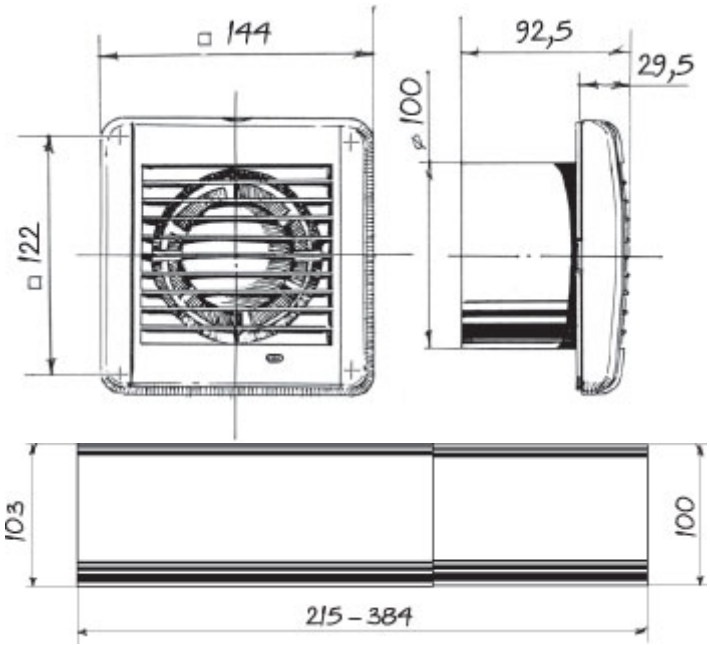

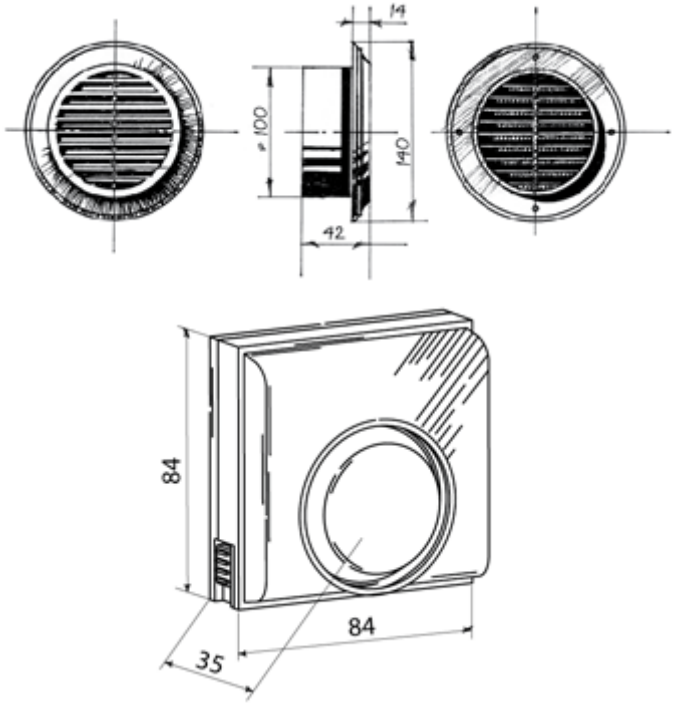
14
ø 100
140
42
84
84
35