

# KFK 90x50-3

Duct DX cooling units for rectangular air ducts

- Casing material: Galvanized steel

| | Unit of measurement | KFK 90x50-3 |
|---|---|---|
| Weight | kg | 31.5 |

## Dimensions

| ØD1 | ØD2 | B | B1 | B2 | H | H1 | H2 | L |
|---|---|---|---|---|---|---|---|---|
| 22 | 28 | 900 | 940 | 970 | 500 | 595 | 340 | 44 |

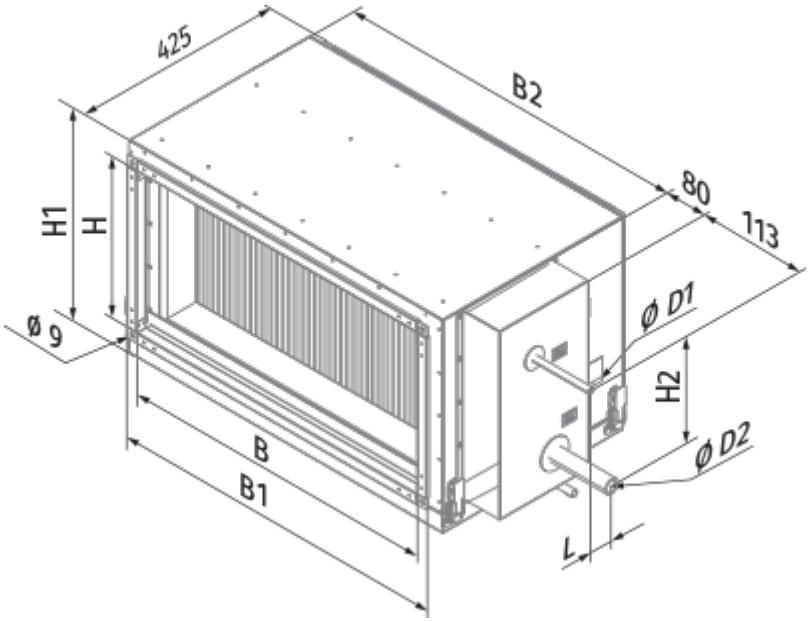
425
B2
80
113
H1
H
Ø 9
Ø D1
H2
Ø D2
B
B1
L