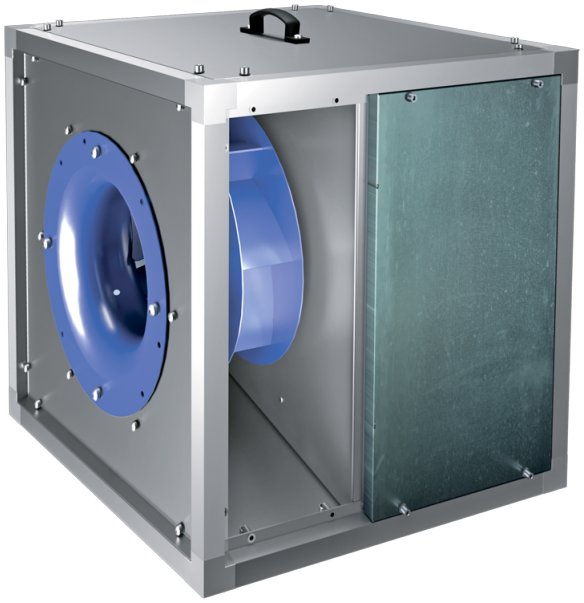

# Iso-VK EC 450 E

Kitchen inline fans in sound-insulated casings with operational temperature of 120 °C with EC-motors

- Sound pressure level LpA at 3 m: 62
- Sound-insulated casing
- Impeller type: Centrifugal impeller with backward curved blades
- Casing material: Aluzinc
- Installation in any position

| | Unit of measurement | Iso-VK EC 450 E |
|---|---|---|
| Phases | - | 1 |
| Minimum supply voltage | V | 230 |
| Maximum supply voltage | V | 230 |
| Power supply frequency | Hz | 50/60 |
| Rated power | W | 1100 |
| Unit current | A | 7.9 |
| Maximum airflow | m³/h | 7200 |
| Rotation speed at 50hz | - | 1500 |
| Sound pressure level LpA at 3 m | dB(A) | 62 |
| Weight | kg | 69.5 |
| Transported air temperature (max) | °C | 120 |
| Transported air temperature (min) | °C | -25 |
| Maximum transported air temperature | - | 120°C CONTINUOUS |
| Ingress protection rating | - | IPX4 |
| Impeller material | - | Steel |
| Size | mm | 450 |

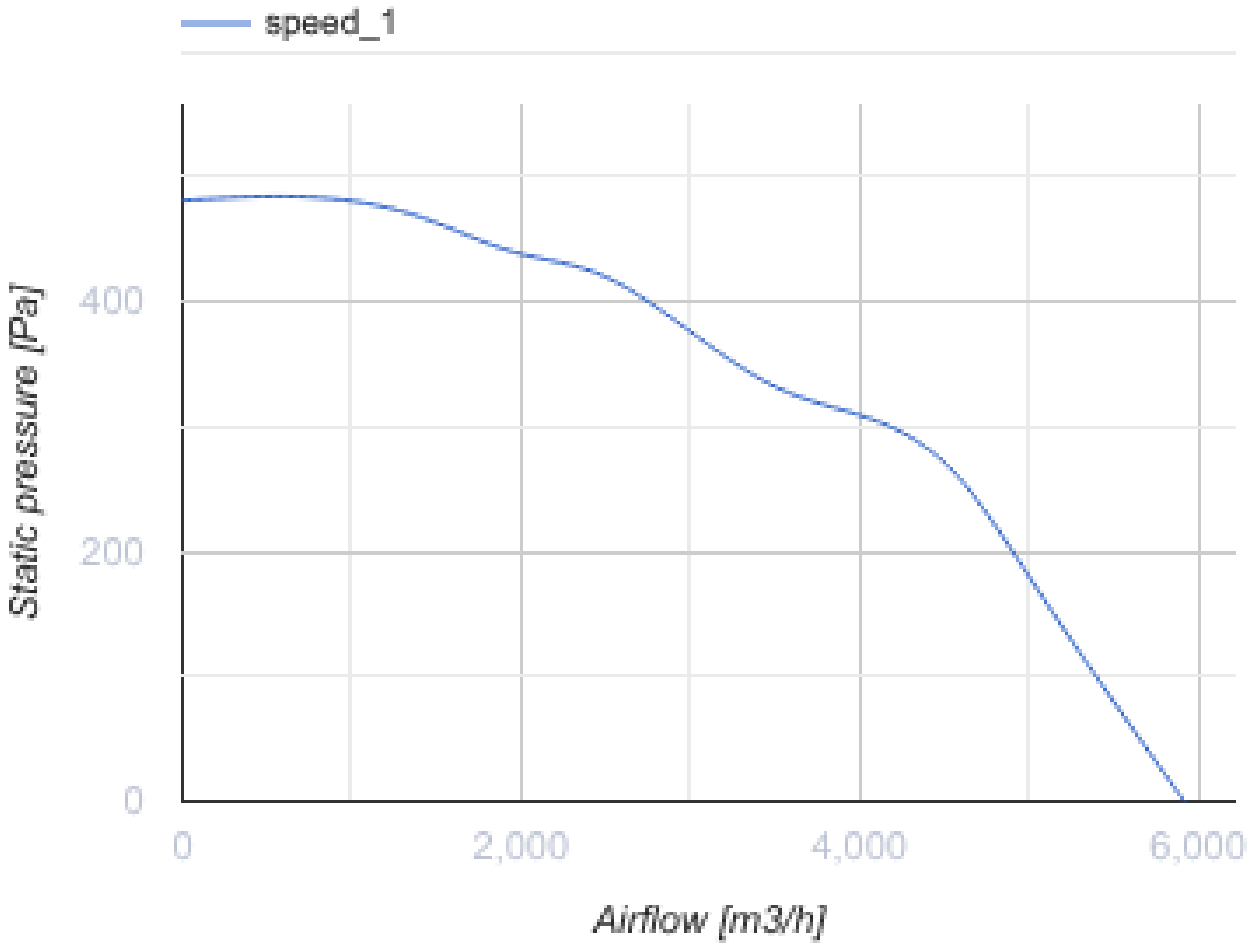
speed_1
Static pressure [Pa]
400
200
0
0
2,000
4,000
6,000
Airflow [m3/h]

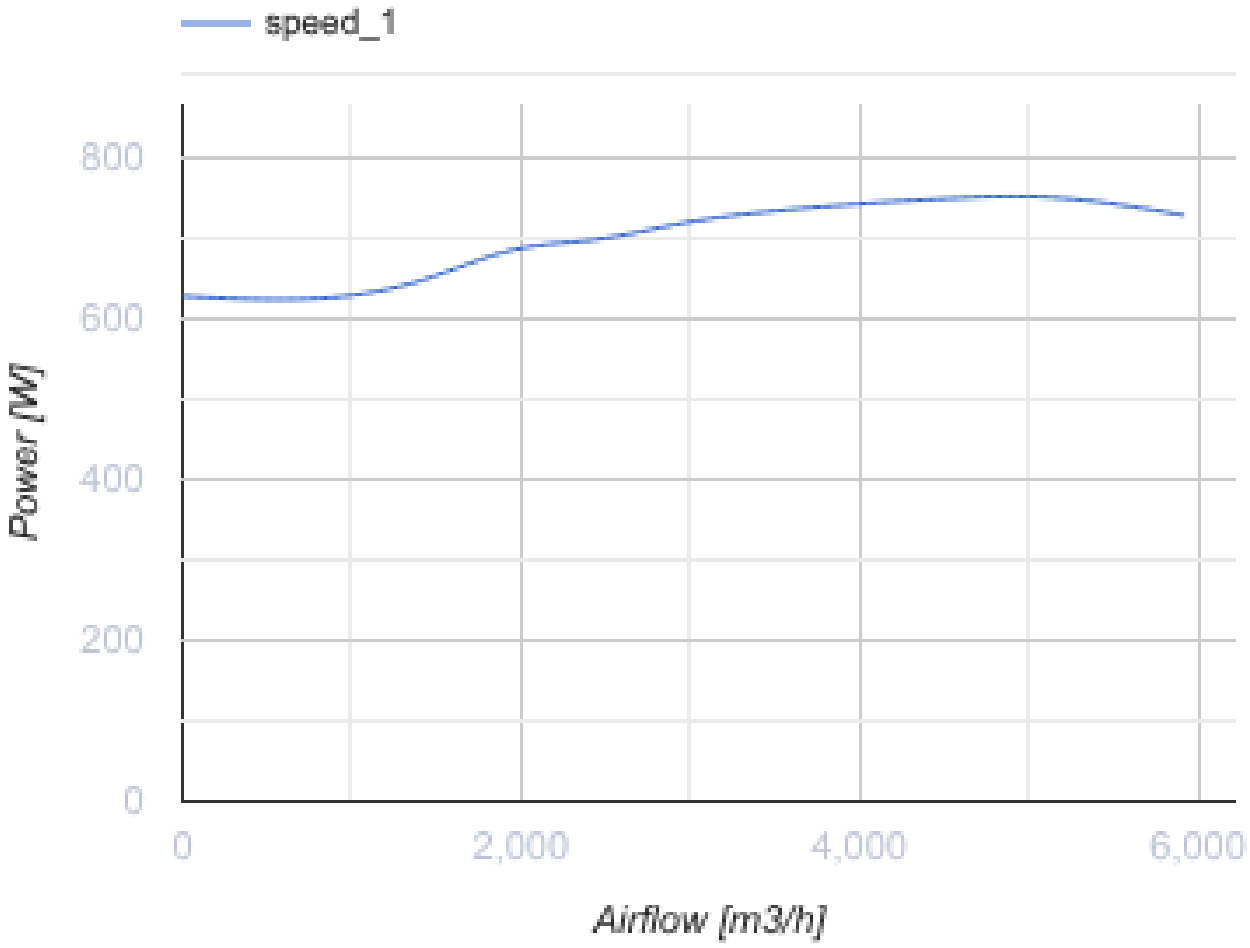


## Dimensions

| H | H1 | H2 | L | L1 | W | W1 | W2 |
|---|---|---|---|---|---|---|---|
| 700 | 738 | 640 | 700 | 738 | 700 | 738 | 282 |

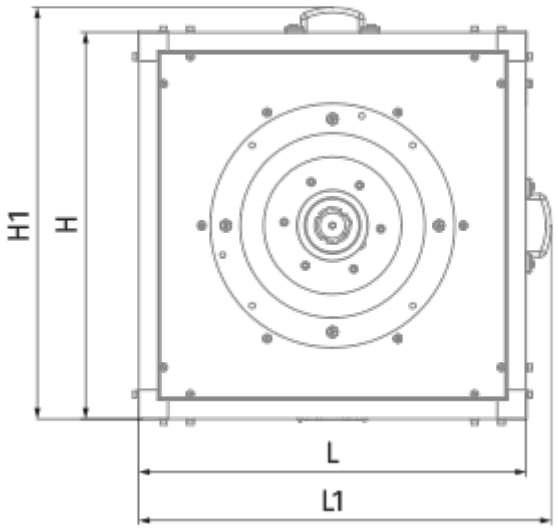
H1
H
L
L1

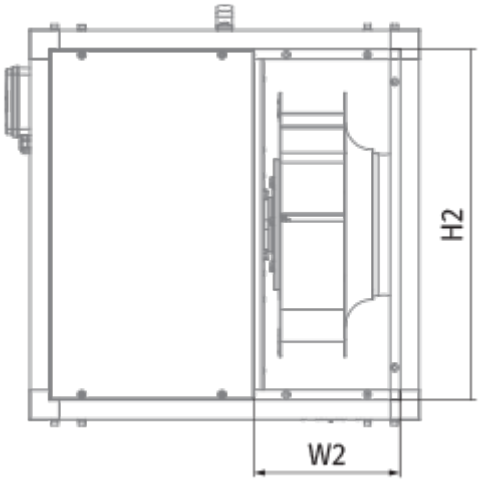
H2
W2

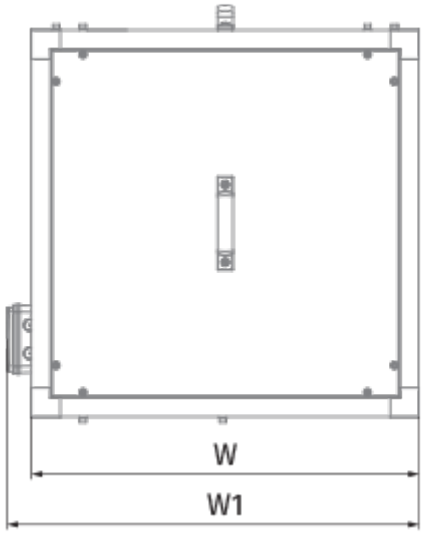
W
W1

## Accessories

### EC motors regulators

| Name | Photo | Description |
|---|---|---|
| CDT E/0-10 |  | Speed control for EC motors |