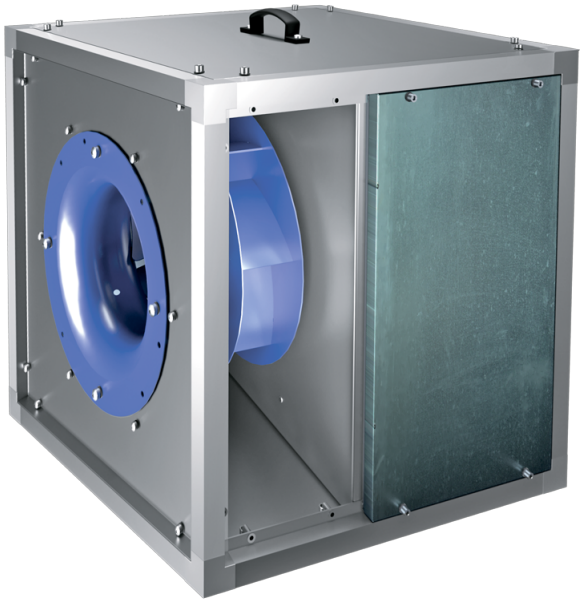

Iso-VK 800 6D

Kitchen inline fans in sound-insulated casings with operational temperature of 120 °C

- Sound pressure level LpA at 3 m: 62
- Sound-insulated casing
- Impeller type: Centrifugal impeller with backward curved blades
- Casing material: Aluzinc
- Installation in any position

	Unit of measurement	Iso-VK 800 6D
Connected air duct size	mm	800
Phases	-	3
Minimum supply voltage	V	400
Maximum supply voltage	V	400
Power supply frequency	Hz	50
Rated power	W	4000
Unit current	A	8.7
Maximum airflow	m^3/h	21860
Rotation speed at 50hz	-	965
Sound pressure level LpA at 3 m	dB(A)	62
Weight	kg	275
Transported air temperature (max)	°C	120
Transported air temperature (min)	°C	-25
Maximum transported air temperature	-	120°C CONTINUOUS
Ingress protection rating	-	IPX4
Impeller material	-	Steel
Size	mm	800

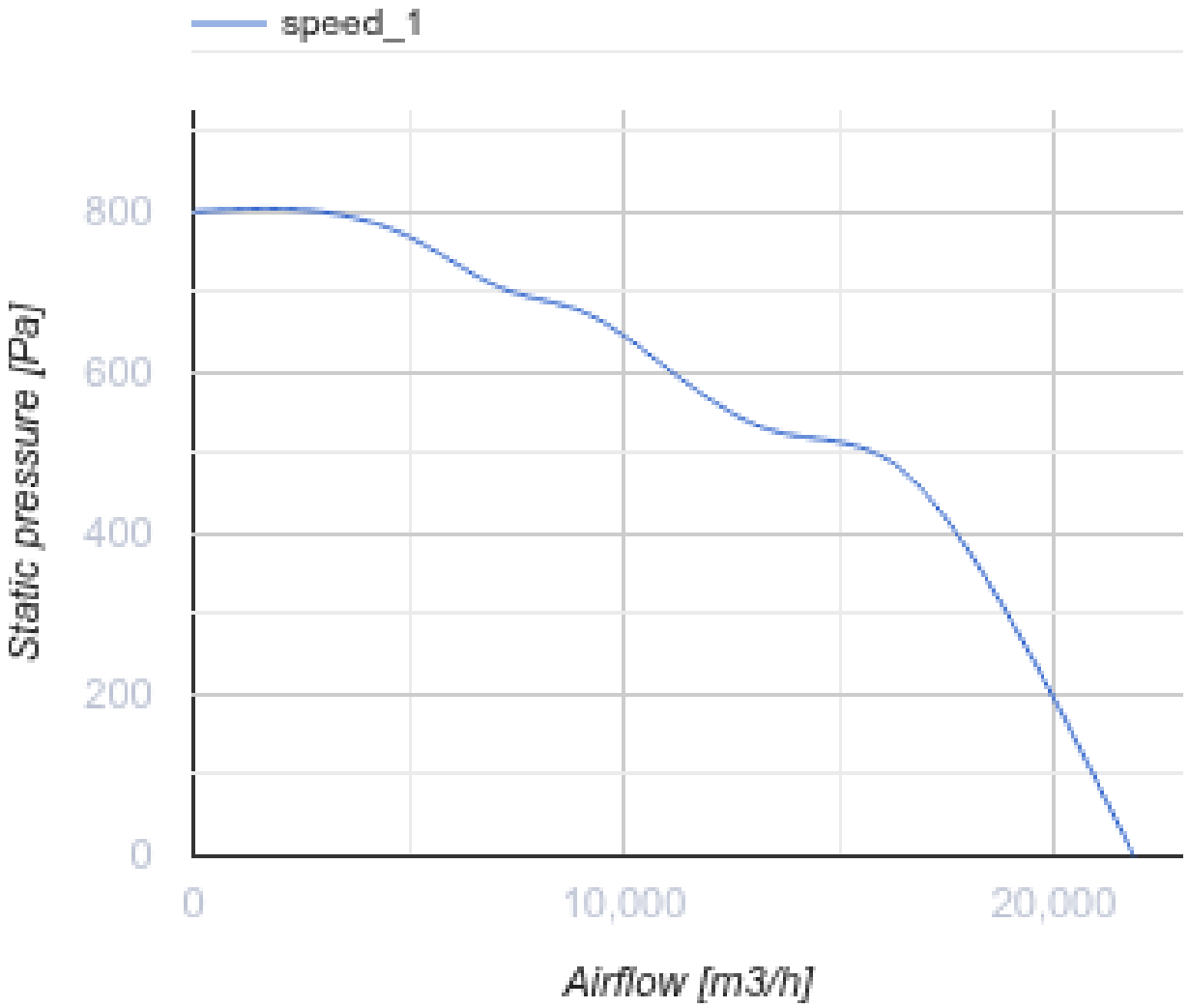
speed_1
800
600
400
200
0
Static pressure [Pa]
0
10,000
20,000
Airflow [m3/h]

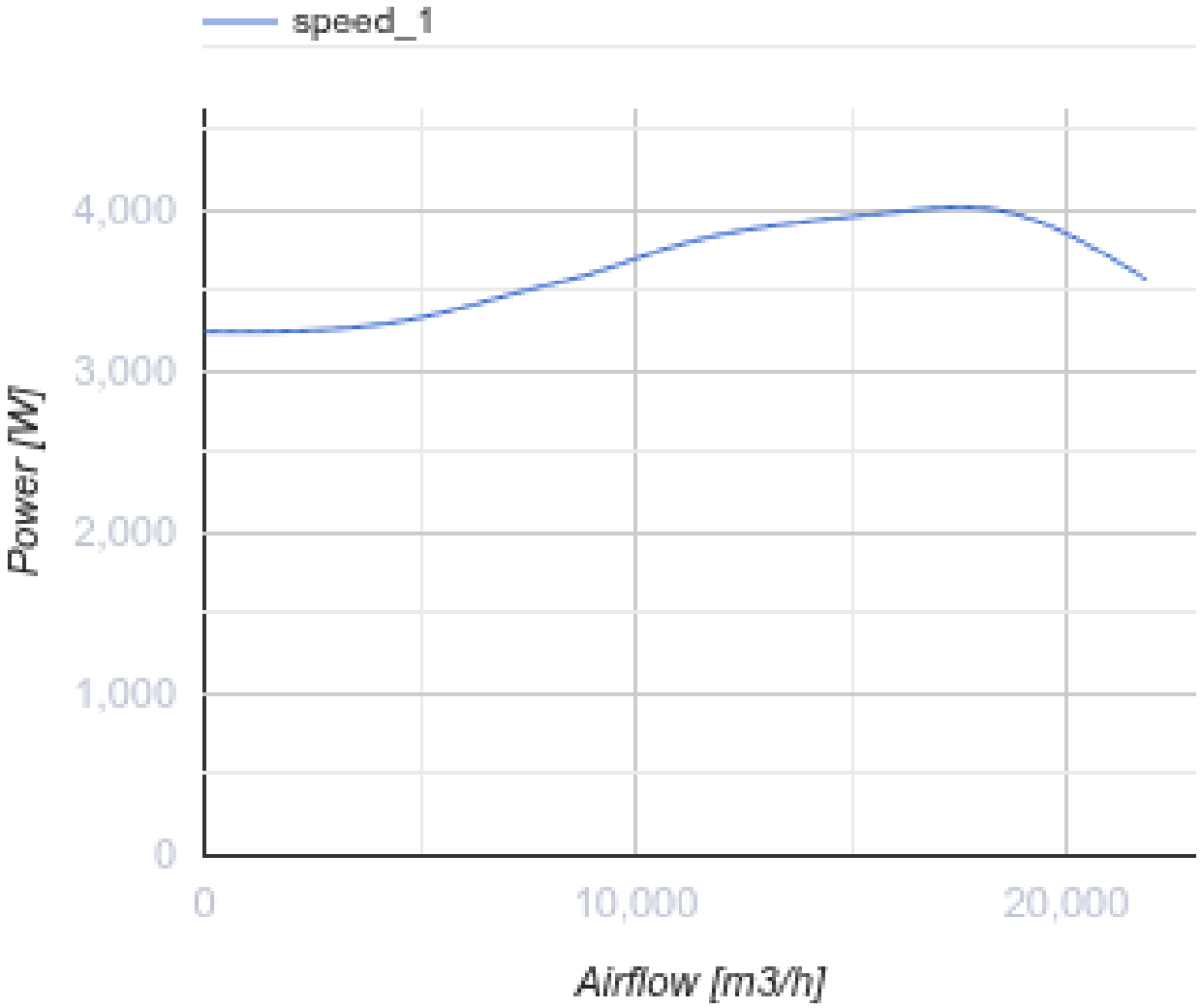

Dimensions

H	H1	H2	L	L1	W	W1	W2
1175	1214	1115	1175	1252	1175	1212	505

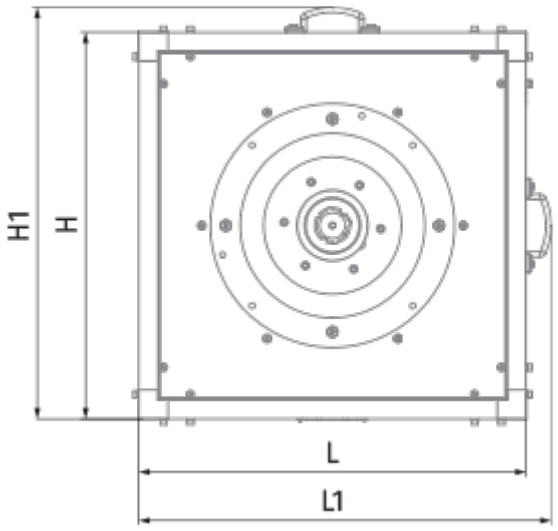
H1
H
L
L1

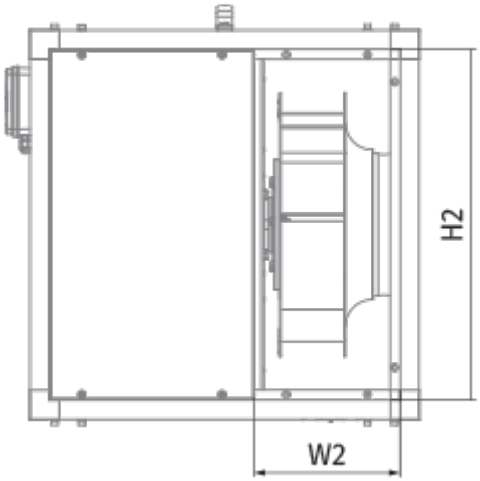
H2
W2

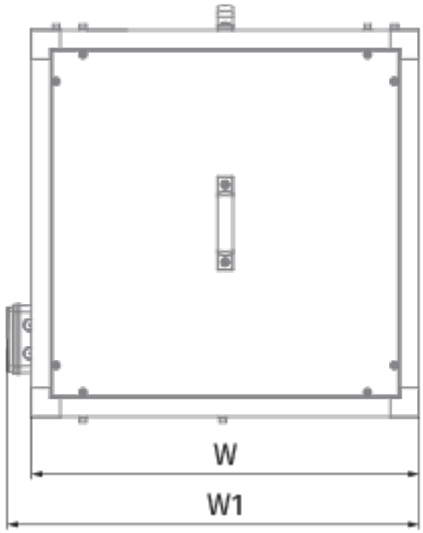
W
W1