

# Iso-Primo EC 400 W

Mixed-flow inline fans in sound-insulated casings with EC-motors

- Sound pressure level LpA at 3 m: 49
- Sound-insulated casing
- Impeller type: Mixed-flow
- Casing material: Galvanized steel
- Installation in any position
- Cable with mains plug

| | Unit of measurement | Iso-Primo EC 400 W |
|---|---|---|
| Connected air duct size | mm | 400 |
| Phases | - | 1 |
| Maximum supply voltage | V | 230 |
| Minimum supply voltage | V | 230 |
| Power supply frequency | Hz | 50/60 |
| Rated power | W | 726 |
| Unit current | A | 4.8 |
| Maximum airflow | $m^3/h$ | 5415 |
| Rotation speed at 50hz | - | 2580 |
| Sound pressure level LpA at 3 m | dB(A) | 49 |
| Weight | kg | 22.8 |
| Transported air temperature (max) | °C | 55 |
| Transported air temperature (min) | °C | -25 |
| Ambient air temperature max | °C | 40 |
| Ambient air temperature min | °C | 1 |
| Ingress protection rating | - | IPX4 |
| Ingress protection rating of the drive | - | IP44 |
| Impeller material | - | Plastic |

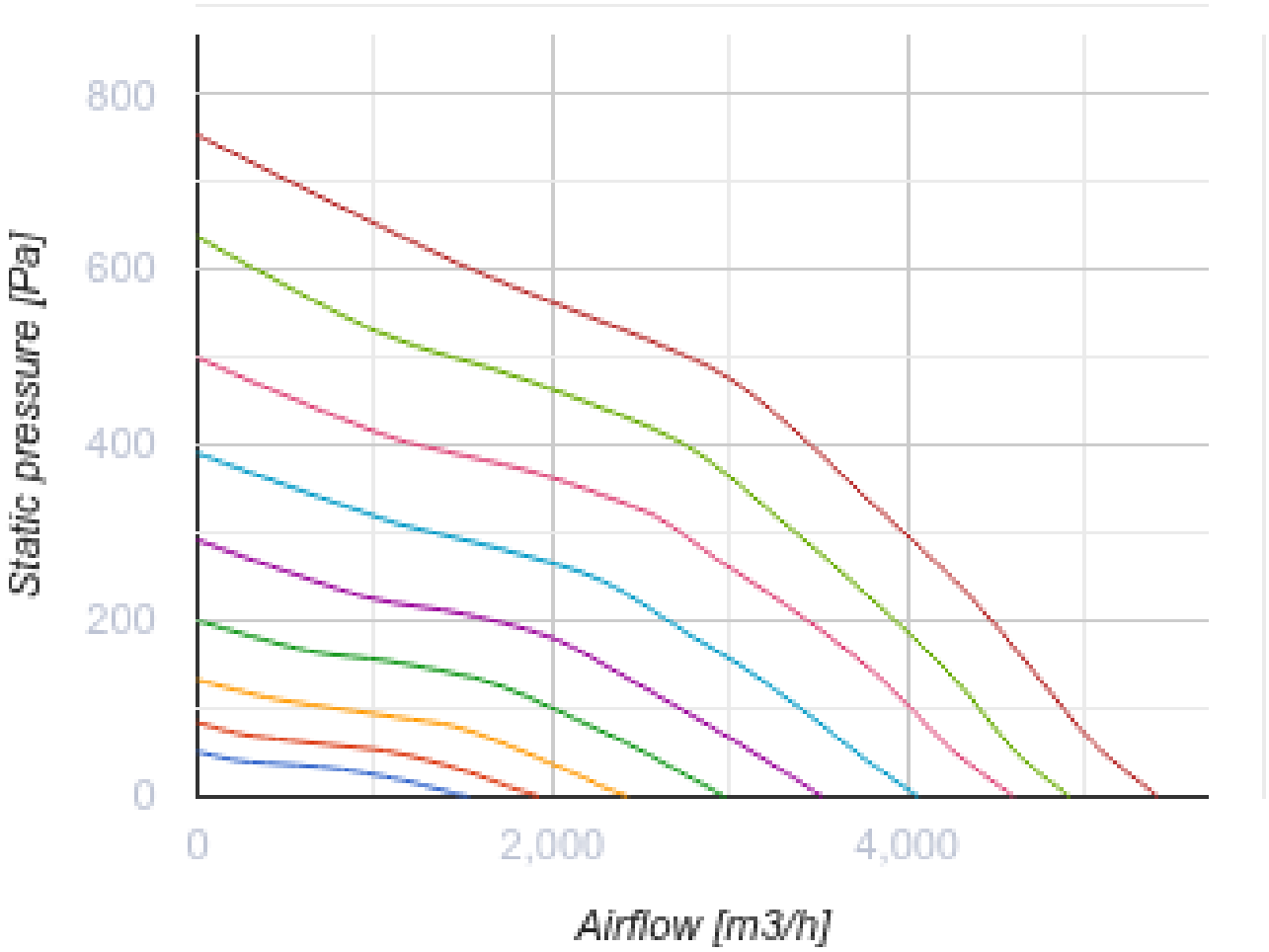
800
600
400
200
0
Static pressure [Pa]
0
2,000
4,000
Airflow [m3/h]

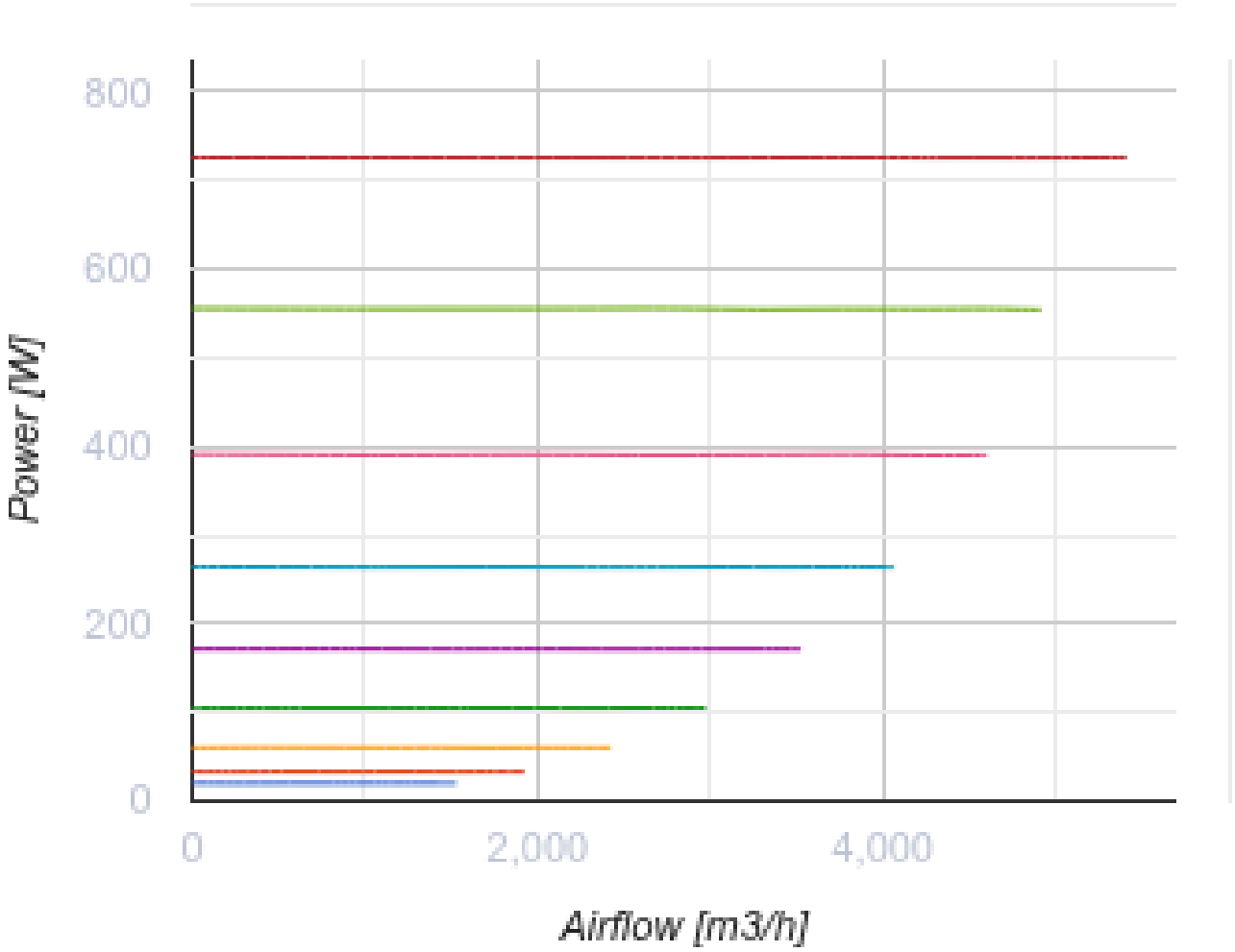


## Dimensions

| Ø D | Ø D1 | H | L | L1 |
|---|---|---|---|---|
| 399 | 460 | 517 | 648 | 785 |

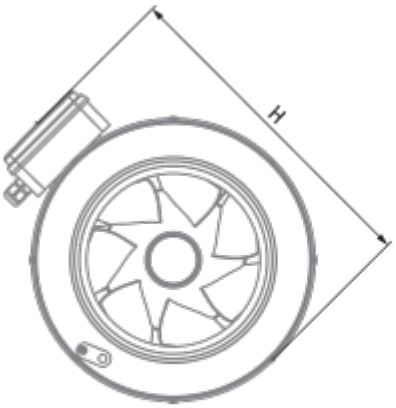


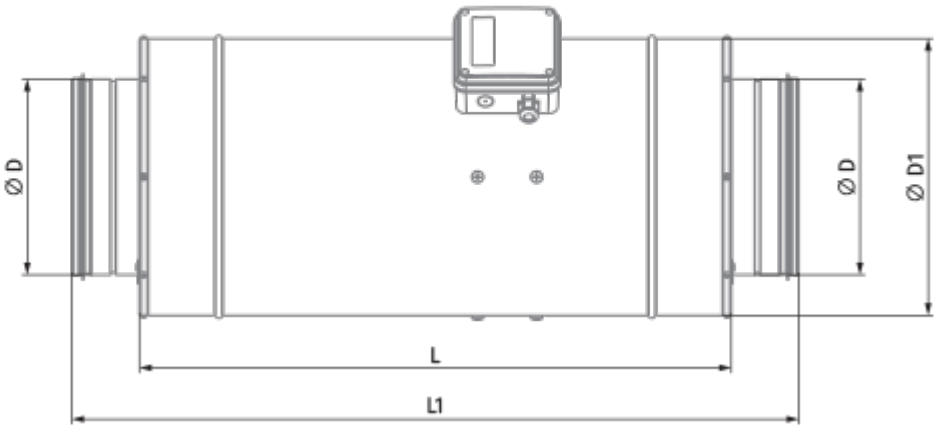


## Accessories

### For round ducts

| Name | Photo | Description |
|---|---|---|
| SD 400/900 |  | Silencers for round ducts |
| SD 400/1200 |  | Silencers for round ducts |

### For round ducts

| Name | Photo | Description |
|---|---|---|
| VKA 400 |  | Air dampers for round ducts |

### EC motors regulators

| Name | Photo | Description |
|---|---|---|
| CDT E/0-10 |  | Speed control for EC motors |