

Fresher 50 L

Wall vent for natural supply ventilation

- Sound pressure level LpA at 3 m: 23
- Sound pressure level LpA at 1 m: 32

	Unit of measurement	Fresher 50 L		
Phases	-	1		
Minimum supply voltage	V	100		
Maximum supply voltage	V	240		
Power supply frequency	Hz	50/60		
Rated power	W	3.8	4.7	7.4
Unit current	A	0.031	0.039	0.061
Maximum airflow	m³/h	20	35	50
Sound pressure level LpA at 3 m	dB(A)	13	20	23
Sound pressure level LpA at 1 m	dB(A)	22	29	32
Ambient air temperature min	°C	-30		
Ambient air temperature max	°C	50		
Ingress protection rating	-	IP24		

Dimensions

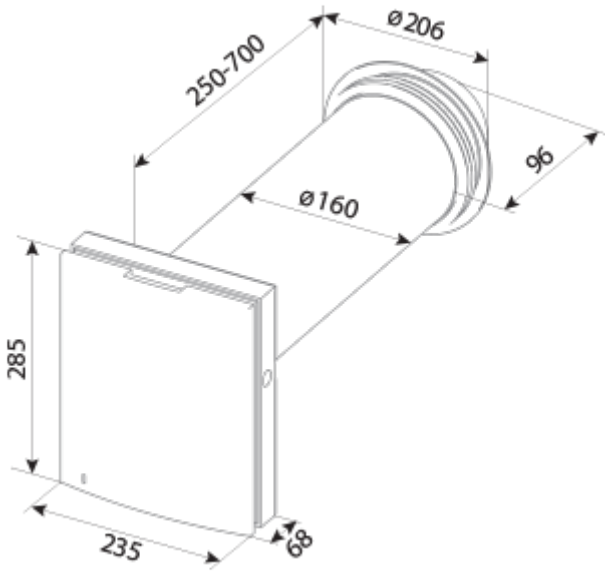
250-700
Ø206
96
Ø160
285
235
68