

Freshbox 100 WiFi

Single-room air handling units

- Sound pressure level LpA at 3 m: 39
- Heat exchanger type: Counter flow
- Heat exchanger material: Polystyrene
- Sound-insulated casing
- Control: Built-in control panel, Smartphone
- Casing material: Coated steel
- Temperature sensor: Built-in

	Unit of measurement	Freshbox 100 WiFi				
Connected air duct size	mm	100				
Phases	-	1				
Minimum supply voltage	V	110				
Maximum supply voltage	V	240				
Power supply frequency	Hz	50/60				
Rated power	W	20	23	29	37	53
Unit current	A	0.4				
Maximum airflow	m³/h	30	44	60	75	100
Rotation speed at 50hz	-	2200				
Sound pressure level LpA at 3 m	dB(A)	13	20	27	33	39
Heat recovery efficiency	%	98	95	92	90	89
Heat exchanger type	-	Counter flow				
Heat exchanger material	-	Polystyrene				
Weight	kg	31				
Transported air temperature (max)	°C	40				
Transported air temperature (min)	°C	-20				
Ambient air temperature min	°C	1				
Ambient air temperature max	°C	40				
Ingress protection rating	-	IP22				
Ambient air humidity max	%	70				
Ingress protection rating of the drive	-	IP44				

Minimum wall thickness	mm	50
Maximum wall thickness	mm	2000

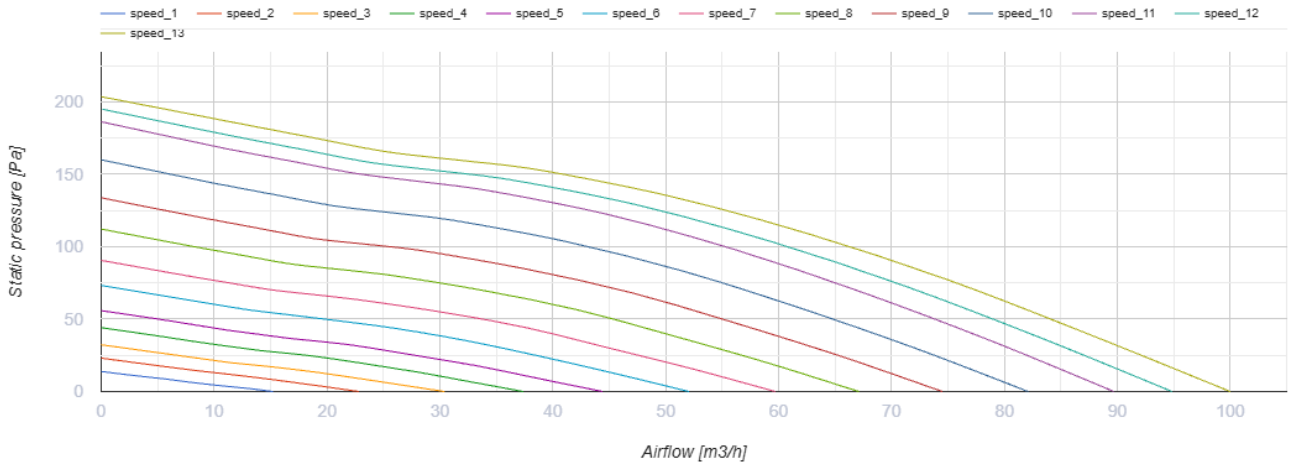

Dimensions

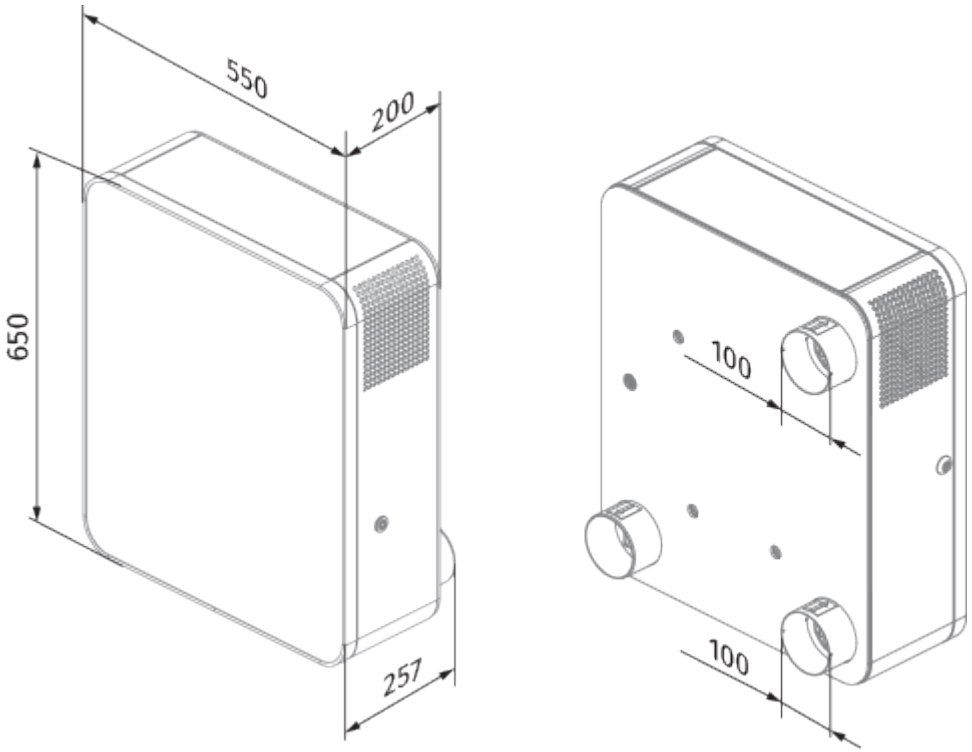

Accessories

CO2 sensors

Name	Photo	Description

CD-1		CO2 sensors
CD-2		CO2 sensors

Other accessories

Name	Photo	Description
EH Freshbox 100		Electric heater
FP 193x158x18 G4 PPI		G4 panel filter

Humidity sensors

Name	Photo	Description
HR-S		Electro-mechanical humidistat