

Freshbox 100 ERV

Single-room air handling units

- Sound pressure level LpA at 3 m: 39
- Heat exchanger type: Counter flow
- Heat exchanger material: Enthalpy
- Supply filter: G4, F8 (Option: F8 C, H13)
- Extract filter: G4
- Sound-insulated casing
- Enthalpy heat exchanger
- Bypass: Auto
- Control: Remote Control, Built-in control panel, Wired control panel
- Casing material: Coated steel
- Temperature sensor: Built-in

	Unit of measurement	Freshbox 100 ERV		
Connected air duct size	mm	100		
Phases	-	1		
Maximum supply voltage	V	240		
Minimum supply voltage	V	110		
Power supply frequency	Hz	50/60		
Rated power	W	12	21	45
Unit current	A	0.4		
Maximum airflow	m^3/h	30	60	100
Rotation speed at 50hz	-	2200		
Sound pressure level LpA at 3 m	dB(A)	13	27	39
Heat recovery efficiency	%	96	89	83
Heat recovery efficiency, max	%	96		
Heat exchanger type	-	Counter flow		
Heat exchanger material	-	Enthalpy		
Weight	kg	31		
Supply filter	-	G4, F8 (Option: F8 C, H13)		
Extract filter	-	G4		
Transported air temperature (max)	°C	40		
Transported air temperature (min)	°C	-20		
Ambient air temperature min	°C	1		
Ambient air temperature max	°C	40		

Ingress protection rating	-	IP22
Ambient air humidity max	%	70
Ingress protection rating of the drive	-	IP44
Minimum wall thickness	mm	50
Maximum wall thickness	mm	2000

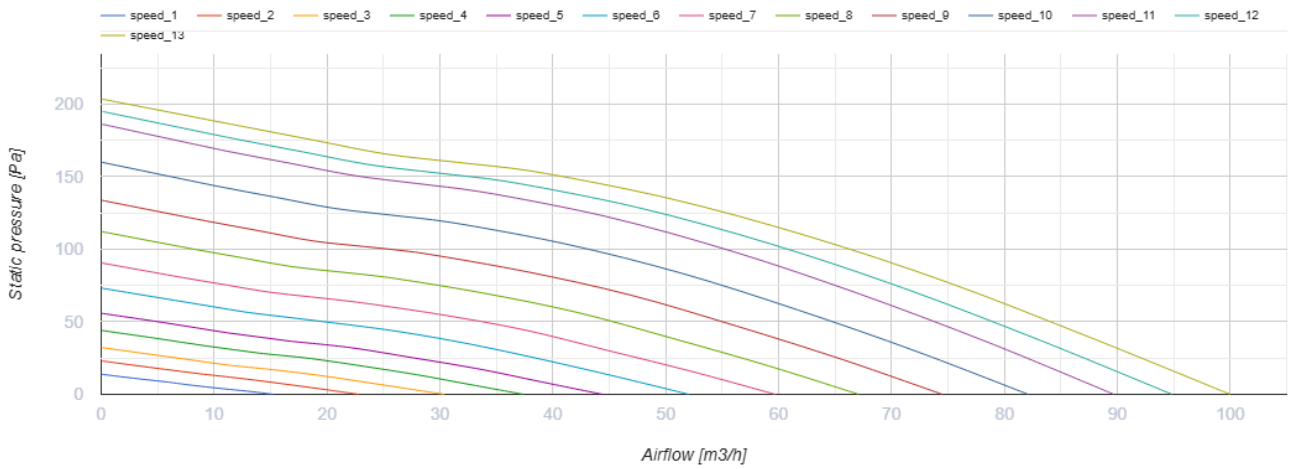

Dimensions

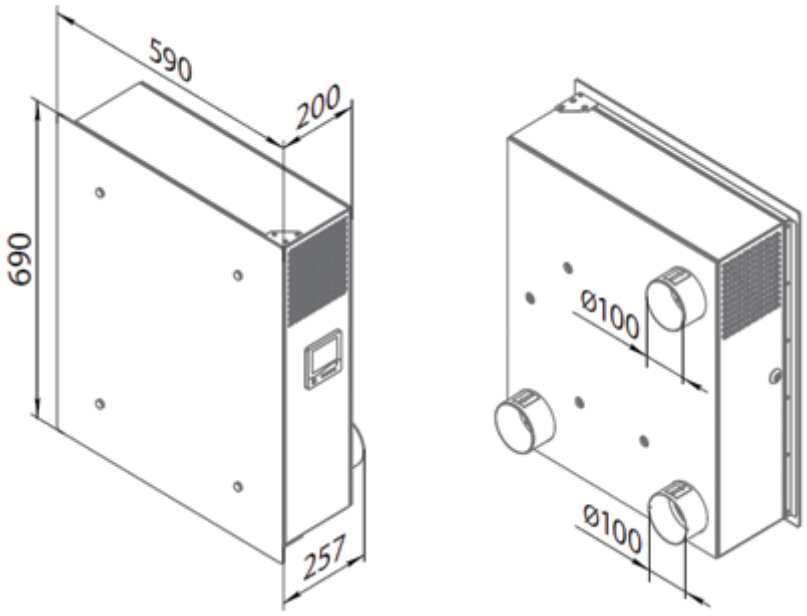

Ecodesign

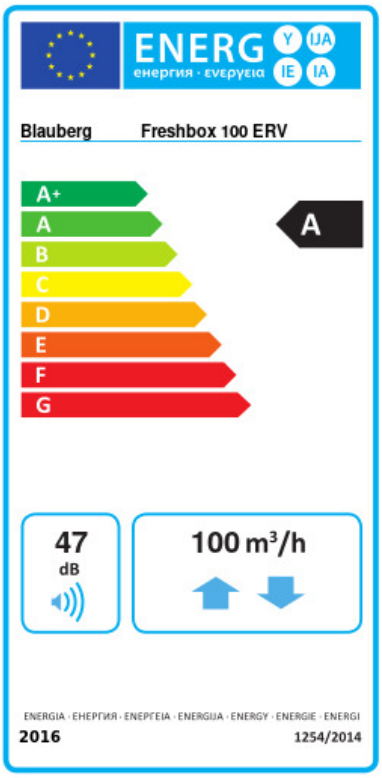

Trademark	Blauberg					
Model	Freshbox 100 ERV					
Specific energy consumption (SEC) (kWh/(m²/a))	Cold		Average		Warm	
	-78.7	A+	-40.3	A	-15.6	E
Type of ventilation unit	Bidirectional					
Type of drive installed	Variable speed					
Type of heat recovery system	Recuperative					
Thermal efficiency of heat recovery (%)	86					
Maximum flow rate (m³/h)	100					
Electric power input (W)	45					
Reference flow rate (m³/s)	0.017					
Specific power input (SPI) (W/(m³/h))	0.35					
Control typology	Local demand control					
Maximum internal leakage rates (%)	0.1					
Maximum external leakage rates (%)	0.9					
Mixing rate (%)	1					
Airflow sensitivity at +20 Pa and -20 Pa (%)	0.93					
The indoor/outdoor air tightness (m³/h)	7					
Declared typology	RVU BVU					
Sound power level (dB(A))	47					
The annual electricity consumption (AEC) (kWh/a)	Cold		Average		Warm	
	786		249		204	
The annual heating saved (AHS) (kWh/a)	Cold		Average		Warm	
	8963		4581		2072	

Accessories

CO2 sensors

Name	Photo	Description
CD-1		CO2 sensors

CD-2		CO2 sensors

Other accessories

Name	Photo	Description
EH Freshbox 100		Electric heater