

EVH 160-2.0-1

Electric duct preheater for heat exchanger freeze protection

• Casing material: Galvanized steel

	Unit of measurement	EVH 160-2.0-1
Connected air duct size	mm	160
Phases	-	1
Minimum supply voltage	V	230
Maximum supply voltage	V	230
Power supply frequency	Hz	50/60
Rated power	W	2000

Dimensions

ØD	B	H	L	L1
159	175	293	306	190

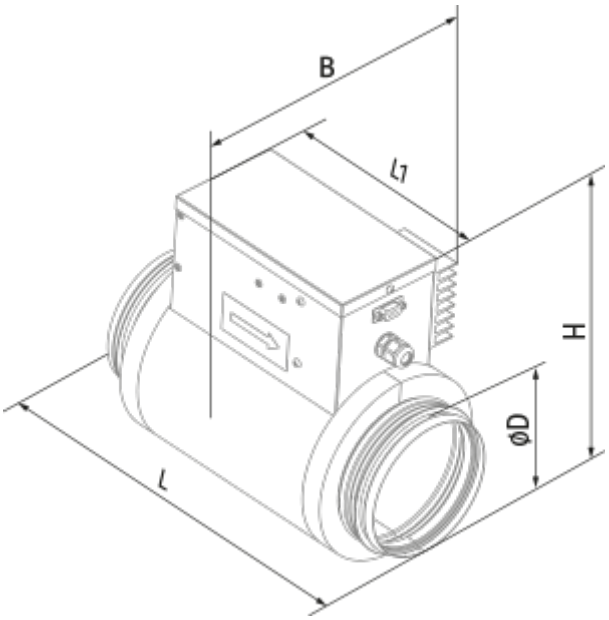
B
l1
H
ϕD
l