

EVH 125-0.6-1

Electric duct preheater for heat exchanger freeze protection

- Casing material: Galvanized steel

	Unit of measurement	EVH 125-0.6-1
Connected air duct size	mm	125
Phases	-	1
Minimum supply voltage	V	230
Maximum supply voltage	V	230
Power supply frequency	Hz	50/60
Rated power	W	600

Dimensions

ØD	B	H	L	L1
124	155	251	306	190

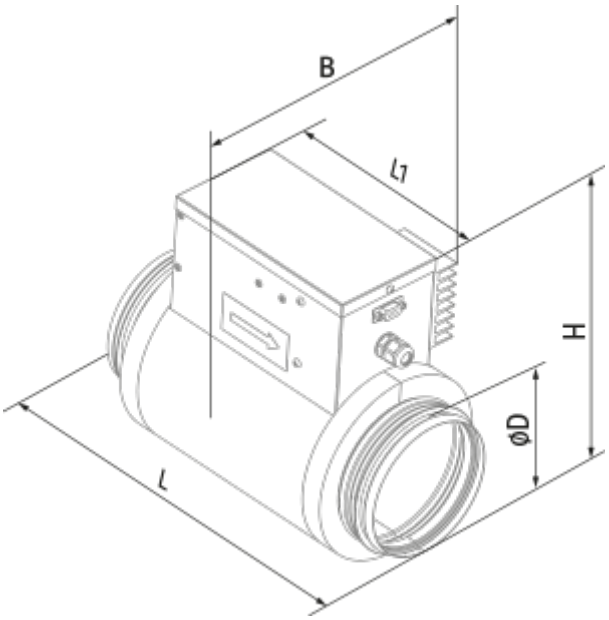
B
l1
H
ϕD
l